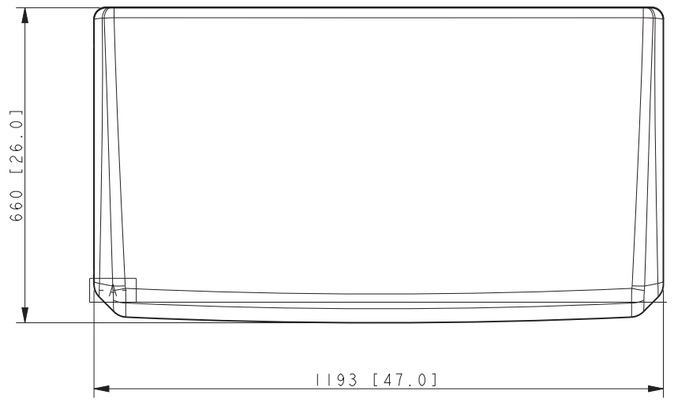

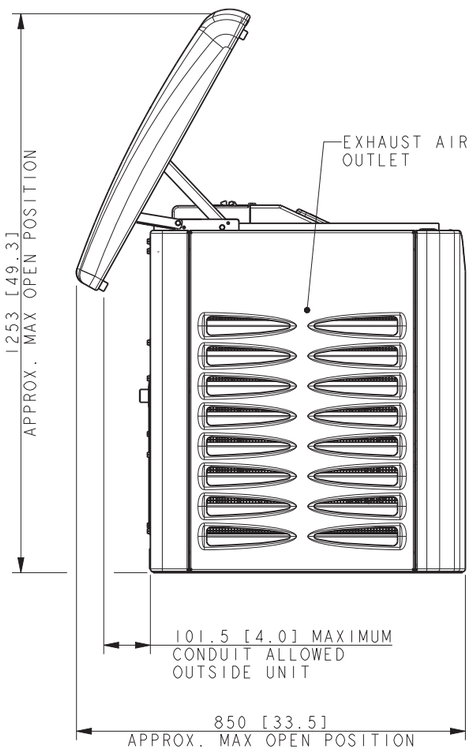

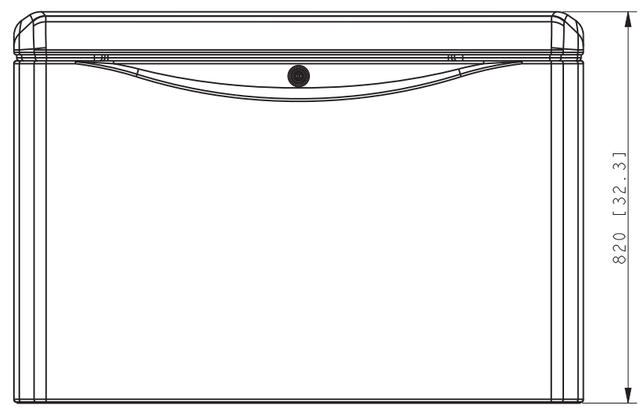

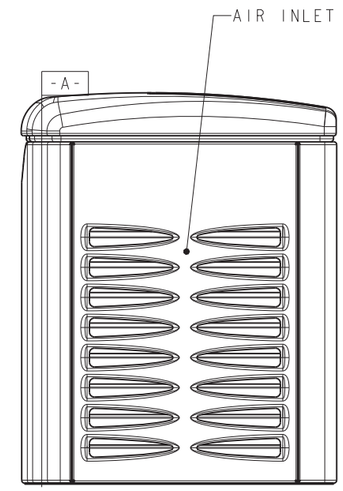

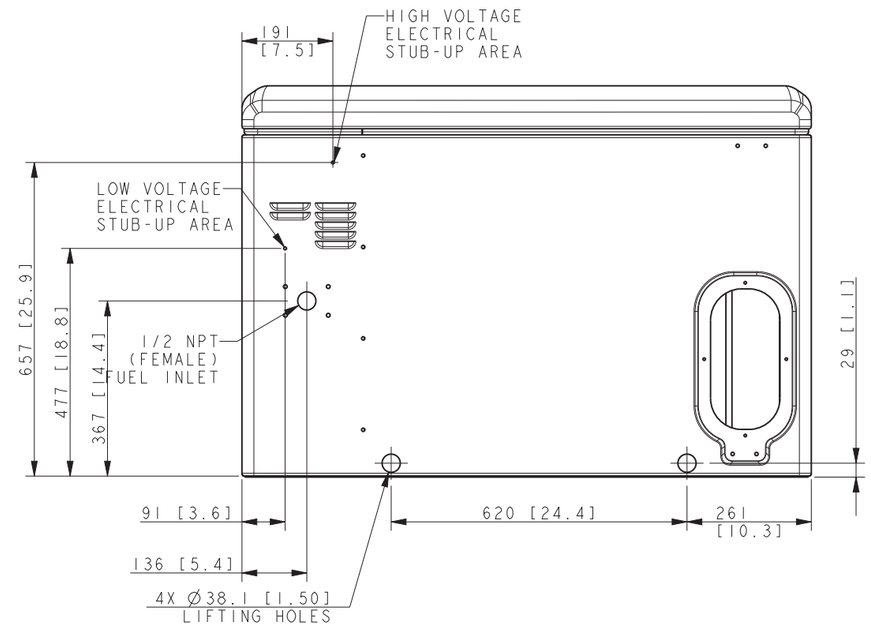

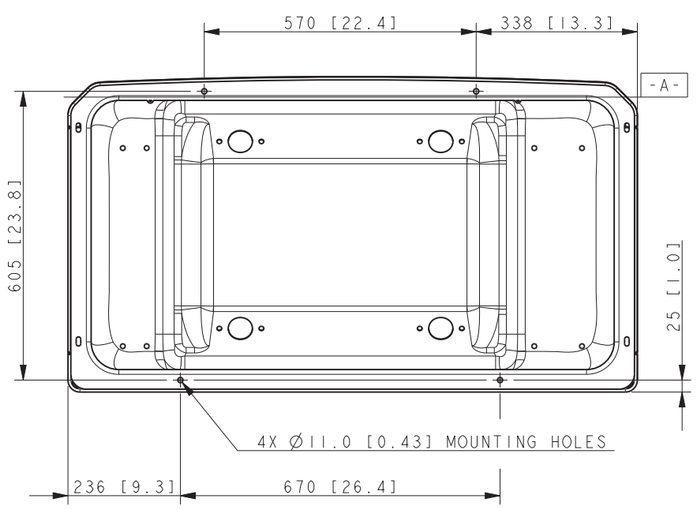

NOTE: DIMENSIONS IN [] ARE INCH EQUIVALENTS.

REV	DATE	ON COMPOSITE DWGS, SEE PART NO. FOR REVISION LEVEL	BY
-	9-23-17	NEW DRAWING [CT179368]	ADP
A	12-15-17	SEE SHEET 3 OF 5 [CT182535]	KRM
B	5-24-18	SEE SHEET 4 & 5 [CT187735]	ADP
C	19JUN2019	SEE SHEET 4 [PR08238]	AWK

DO NOT SCALE. REFERENCE THE MODEL FOR ALL UNSPECIFIED DIMENSIONS

UNLESS OTHERWISE SPECIFIED:
ALL DIMENSIONS IN MILLIMETERS
GENERAL TOLERANCES: N/A

THIRD ANGLE PROJECTION

APPROVALS		DATE
DRAWN	ADP	9-23-17
CHECKED	VPP	9-23-17
APPROVED	BJF	9-23-17

KOHLER.
KOHLER, WISCONSIN 53044

THIS DRAWING IN DESIGN AND DETAIL IS KOHLER CO. PROPERTY AND MUST NOT BE USED EXCEPT IN CONNECTION WITH KOHLER CO. WORK. ALL RIGHTS OF DESIGN OR INVENTION ARE RESERVED.

TITLE
DIMENSION PRINT, 14/20KW RCA

SCALE 0.16 | CAD NO. | SHEET 1 of 5
DWG NO. **ADV-8928** | **D**

14/20RCA

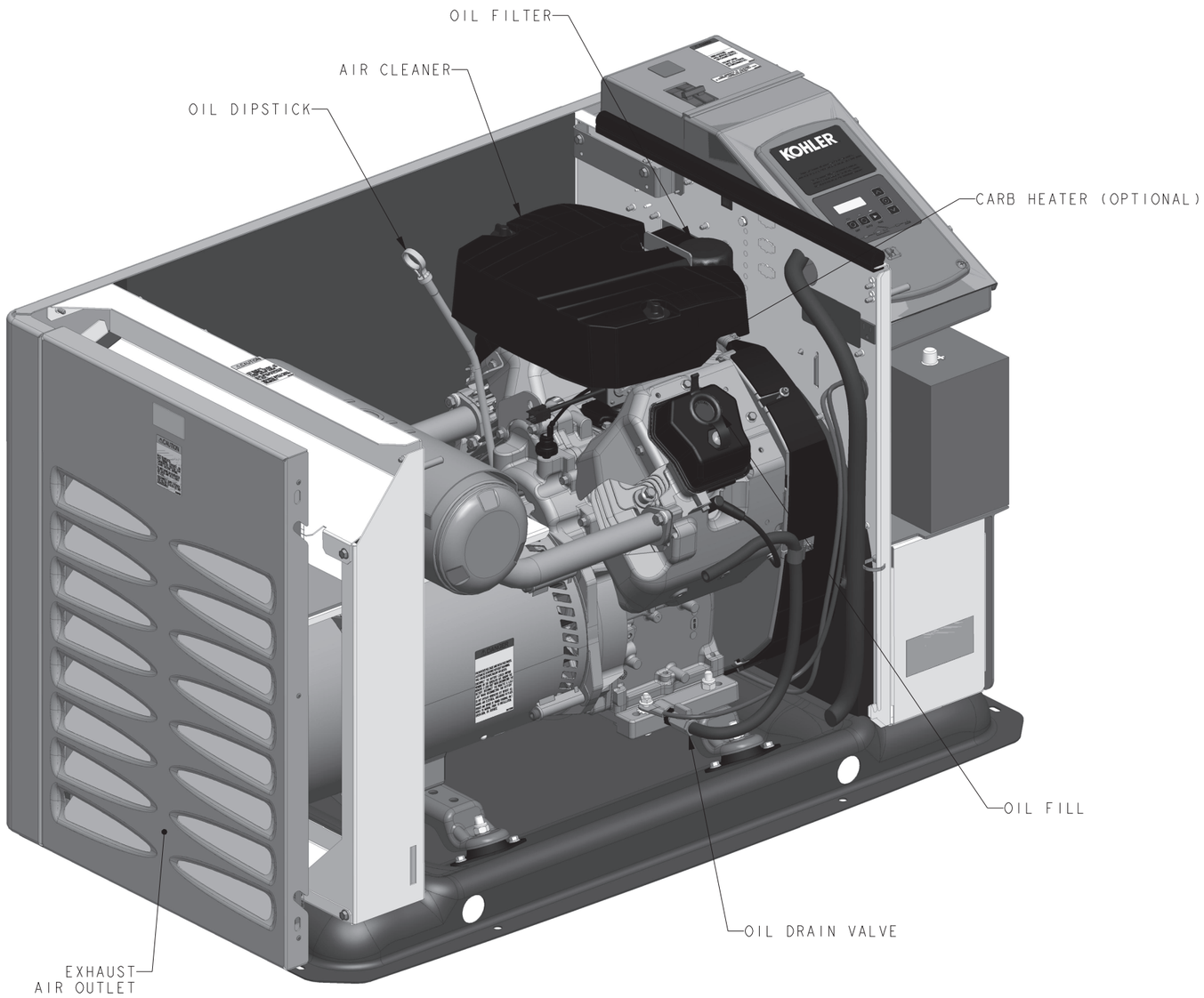

14/20RCA

REV	DATE	ON COMPOSITE DWGS, SEE PART NO. FOR REVISION LEVEL	BY
-	9-23-17	NEW DRAWING [CTI79368]	ADP
A	12-15-17	SEE SHEET 3 OF 5 [CTI82535]	KRM
B	5-24-18	SEE SHEET 4 & 5 [CTI87735]	ADP
C	19JUN2019	SEE SHEET 4 [PR08238]	AWK

DO NOT SCALE. REFERENCE THE MODEL FOR ALL UNSPECIFIED DIMENSIONS

UNLESS OTHERWISE SPECIFIED:
ALL DIMENSIONS IN MILLIMETERS
GENERAL TOLERANCES: N/A

THIRD ANGLE PROJECTION

APPROVALS		DATE
DRAWN	ADP	9-23-17
CHECKED	VPP	9-23-17
APPROVED	BJF	9-23-17

KOHLER.
KOHLER, WISCONSIN 53044

THIS DRAWING IN DESIGN AND DETAIL IS KOHLER CO. PROPERTY AND MUST NOT BE USED EXCEPT IN CONNECTION WITH KOHLER CO. WORK. ALL RIGHTS OF DESIGN OR INVENTION ARE RESERVED.

TITLE
DIMENSION PRINT, 14/20KW RCA

SCALE 0.16 | CAD NO. | SHEET 2 of 5

DWG NO. **ADV-8928** | **D**

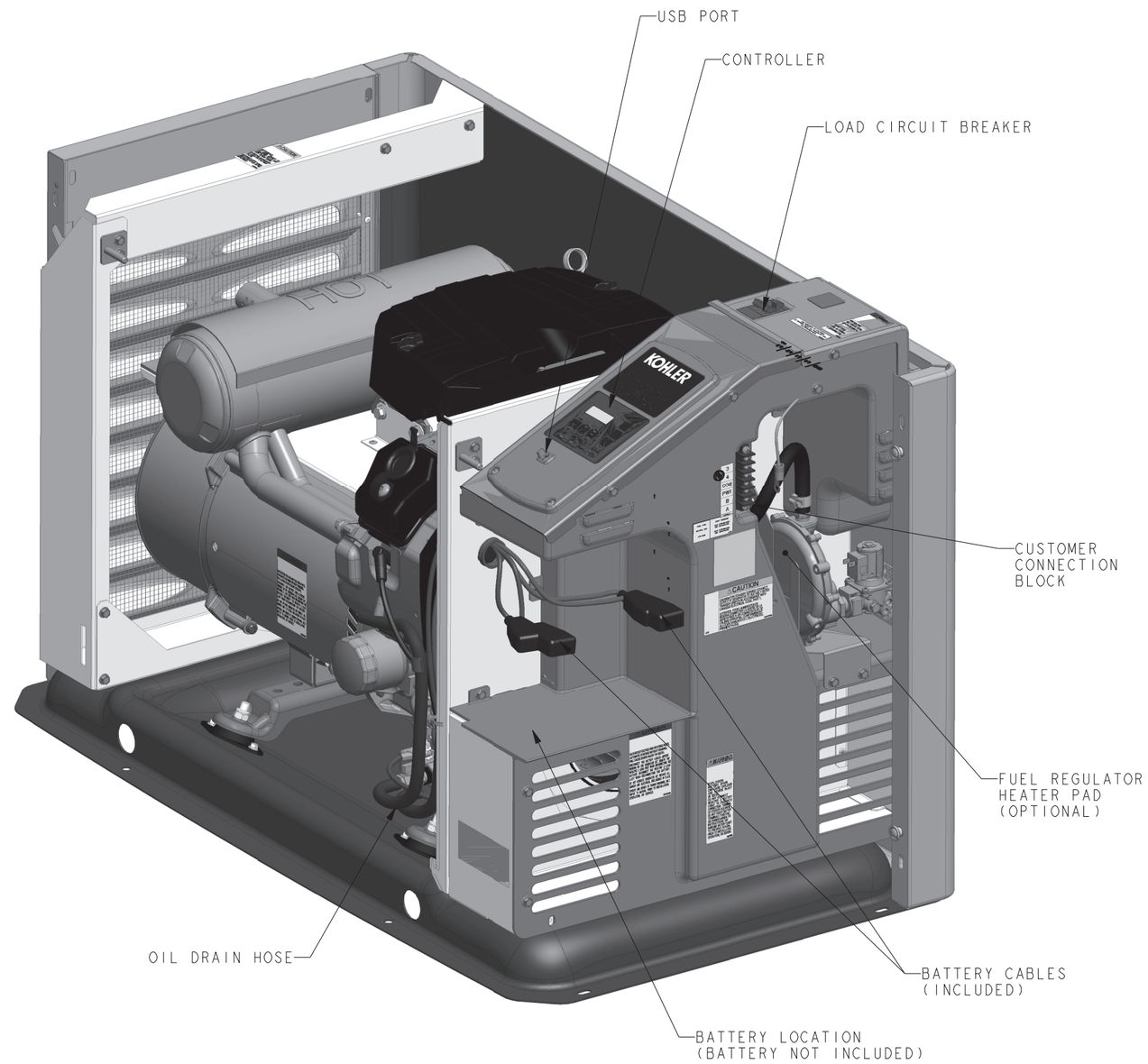

REV	DATE	ON COMPOSITE DWGS, SEE PART NO. FOR REVISION LEVEL	BY
-	9-23-17	NEW DRAWING [CT179368]	ADP
A	12-15-17	UPDATED FUEL REGULATOR GEOMETRY [CT182353]	KRM
B	5-24-18	SEE SHEET 4 & 5 [CT187735]	ADP
C	19JUN2019	SEE SHEET 4 [PR08238]	AWK

14/20RCA

DO NOT SCALE. REFERENCE THE MODEL FOR ALL UNSPECIFIED DIMENSIONS

UNLESS OTHERWISE SPECIFIED:
ALL DIMENSIONS IN MILLIMETERS
GENERAL TOLERANCES: N/A

THIRD ANGLE PROJECTION

APPROVALS		DATE
DRAWN	ADP	9-23-17
CHECKED	VPP	9-23-17
APPROVED	BJF	9-23-17

KOHLER.
KOHLER, WISCONSIN 53044

THIS DRAWING IN DESIGN AND DETAIL IS KOHLER CO. PROPERTY AND MUST NOT BE USED EXCEPT IN CONNECTION WITH KOHLER CO. WORK. ALL RIGHTS OF DESIGN OR INVENTION ARE RESERVED.

TITLE
DIMENSION PRINT, 14/20KW RCA

SCALE 0.30 | CAD NO. | SHEET 3 of 5

DWG NO. ADV-8928 | D

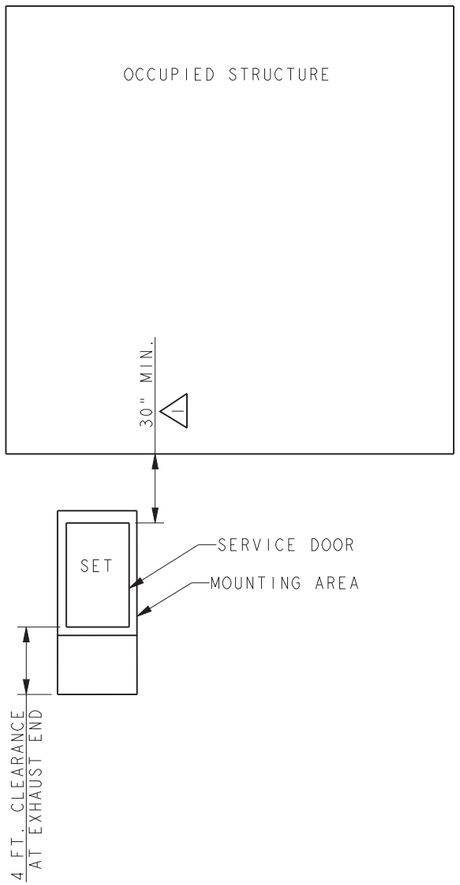

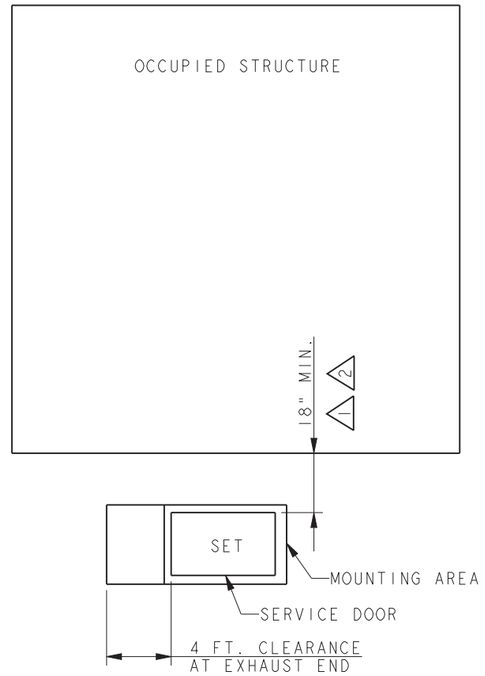

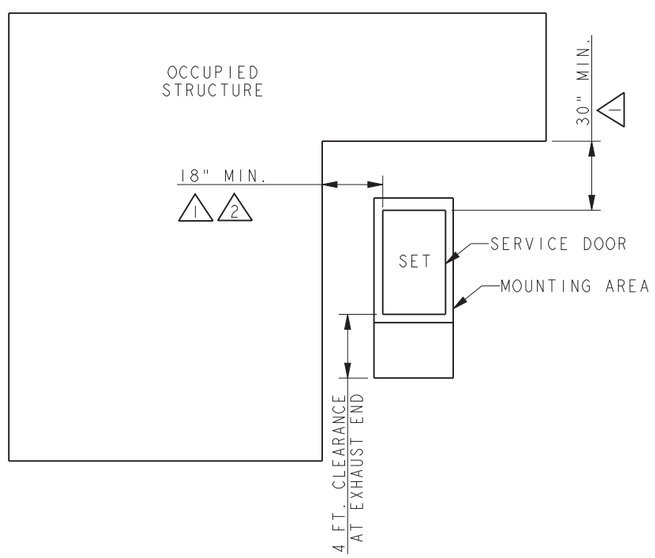

NOTE:

1. THE RECOMMENDED DISTANCE FROM A STRUCTURE IS DEPENDENT ON STATE AND LOCAL CODES. PRODUCT HAS BEEN DEMONSTRATED IN ACCORANCE WITH NFPA 37 SECTION 4.1.4.2 BY A THIRD PARTY TEST FACILITY TO THE DIMENSIONS SHOWN.

2. FOR INSTALLATIONS NEAR NON-COMBUSTIBLE OR 1-HOUR FIRE RATED STRUCTURE, A MINIMUM DISTANCE OF 18" IS REQUIRED TO ENSURE PROPER GENERATOR COOLING.

ACCEPTABLE

1) EXHAUST IS AIMED AWAY OR PARALLEL TO STRUCTURE.
2) EXHAUST IS NOT DIRECTED AT PLAY AREAS, PATIOS OR OTHER AREAS WHERE PEOPLE CONGREGATE.
3) THE NEAREST WINDOW, VENT, DOOR OR SIMILAR STRUCTURE OPENING IS AT LEAST 5 FEET FROM THE EXHAUST END OF THE SET.
4) SET HAS PROPER OFFSET FROM STRUCTURE.
5) WINDOWS & DOORS ON ADJACENT WALLS ARE CLOSED.
6) FURNACE AND OTHER SIMILAR INTAKES ARE AT LEAST 10 FEET FROM EXHAUST END OF SET.
7) WEED BARRIER AND 3 INCH THICK GRAVEL BASE OR CONCRETE PAD LOCATED TO PREVENT GRASS & WEEDS FROM GROWING TOO CLOSE TO THE SET.
8) NO PLANTS, SHRUBS OR OTHER COMBUSTIBLES ALLOWED IN CLEARANCE AREA. (MINIMUM 4 FT. FROM EXHAUST END).
9) REFER TO OWNERS MANUAL FOR OTHER INSTALLATION CONSTRAINTS.
10) NO PLANTS, SHRUBS, OR OTHER COMBUSTIBLES ALLOWED WITHIN 30" OF AIR INTAKE.

14/20RCA SINGLE UNIT CONFIGURATION

REV	DATE	ON COMPOSITE DWGS, SEE PART NO. FOR REVISION LEVEL	BY
-	9-23-17	NEW DRAWING [CT179368]	ADP
A	12-15-17	SEE SHEET 3 OF 5 [CT182535]	KRM
B	5-24-18	(A-5,C-7) 30" MIN WAS 18" MIN; (C-3) NOTE UPDATED [CT187735]	ADP
C	19JUN2019	(B-3) 30" WAS 18"; (C-7 & B-5) 2 REMOVED FROM 30" MIN. DIMENSIONS [PR08238]	AWK

DO NOT SCALE. REFERENCE THE MODEL FOR ALL UNSPECIFIED DIMENSIONS

UNLESS OTHERWISE SPECIFIED: ALL DIMENSIONS IN MILLIMETERS GENERAL TOLERANCES: N/A

THIRD ANGLE PROJECTION

APPROVALS		DATE
DRAWN	ADP	9-23-17
CHECKED	VPP	9-23-17
APPROVED	BJF	9-23-17

KOHLER.
KOHLER, WISCONSIN 53044

THIS DRAWING IN DESIGN AND DETAIL IS KOHLER CO. PROPERTY AND MUST NOT BE USED EXCEPT IN CONNECTION WITH KOHLER CO. WORK. ALL RIGHTS OF DESIGN OR INVENTION ARE RESERVED.

TITLE
DIMENSION PRINT, 14/20KW RCA

SCALE 0.16 | CAD NO. | SHEET 4 of 5

DWG NO. **ADV-8928** | **D**

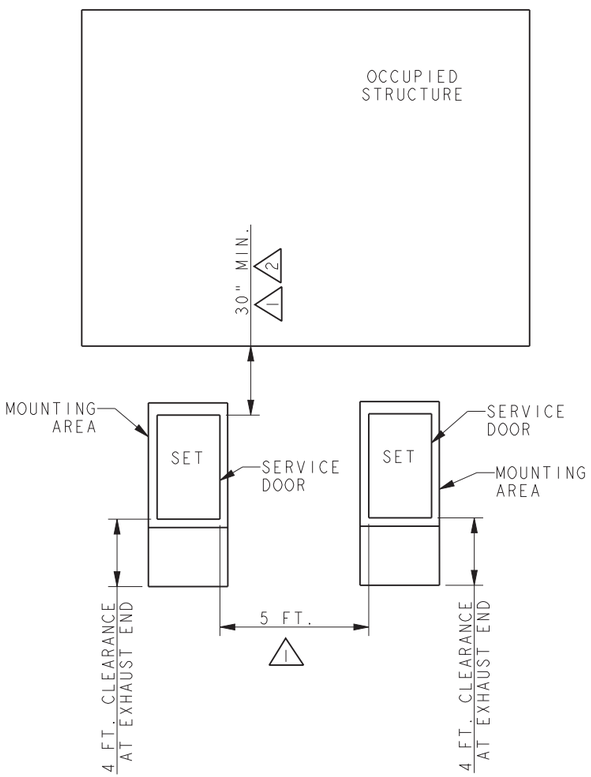

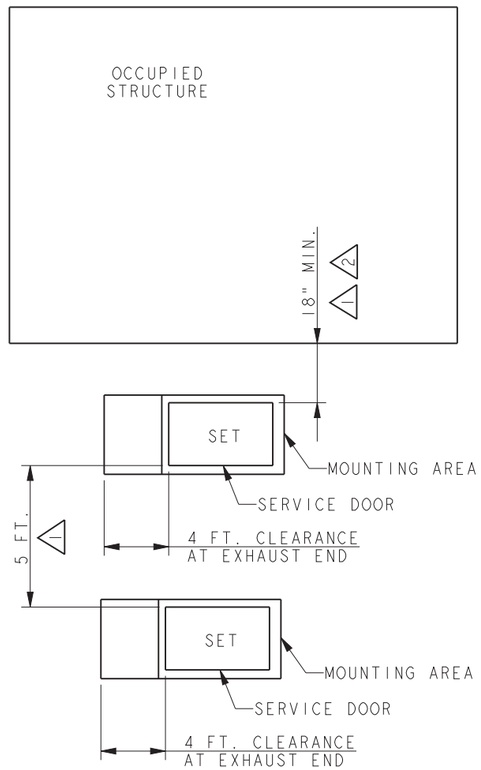

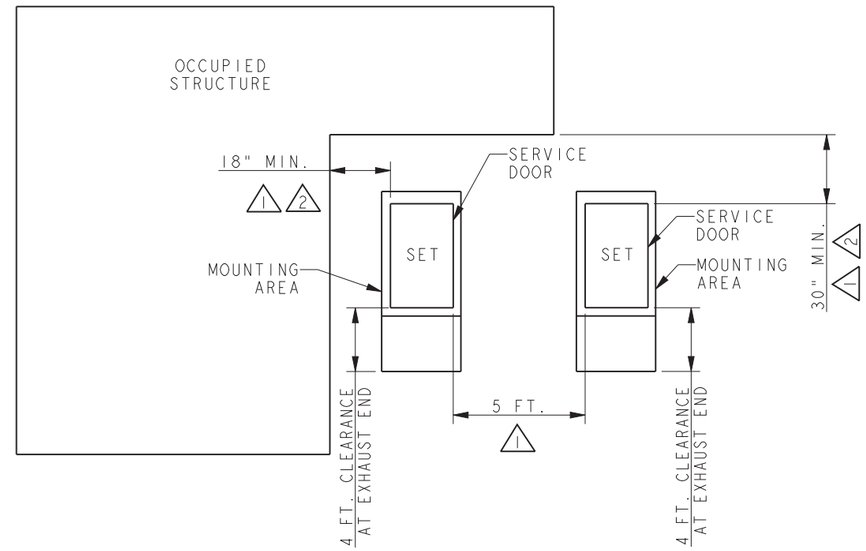

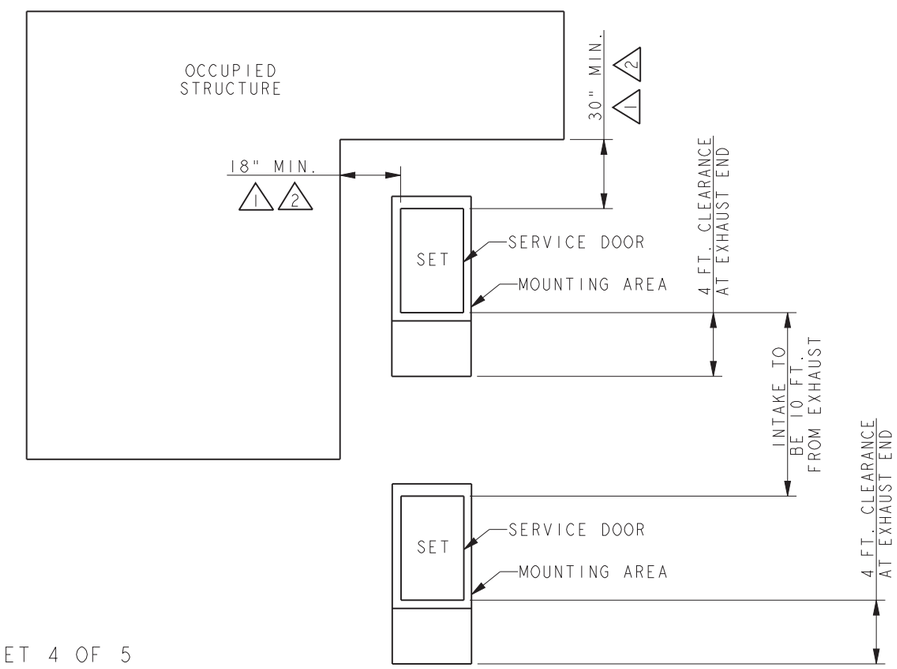

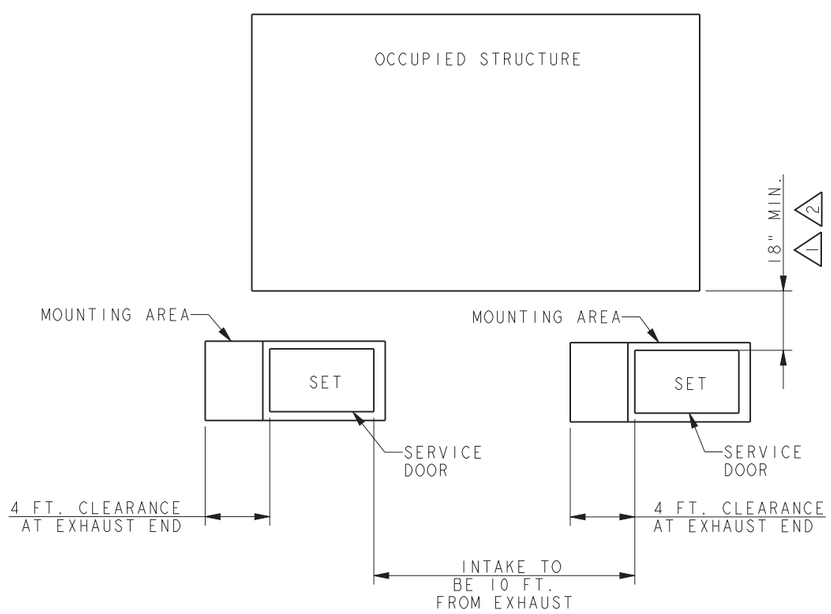

NOTE:
APPLY NOTES ON SHEET 4 OF 5
TO SHEET 5 OF 5.

14/20RCA PARALLEL UNIT CONFIGURATION

REV	DATE	ON COMPOSITE DWGS, SEE PART NO. FOR REVISION LEVEL	BY
-	9-23-17	NEW DRAWING [CT179368]	ADP
A	12-15-17	SEE SHEET 3 OF 5 [CT182535]	KRM
B	5-24-18	(D-7,D-1,B-2) 30" MIN WAS 18" MIN [CT187735]	ADP
C	19JUN2019	SEE SHEET 4 [PR08238]	AWK

DO NOT SCALE. REFERENCE THE MODEL FOR ALL UNSPECIFIED DIMENSIONS

UNLESS OTHERWISE SPECIFIED:
ALL DIMENSIONS IN MILLIMETERS
GENERAL TOLERANCES: N/A

THIRD ANGLE PROJECTION

APPROVALS		DATE
DRAWN	ADP	9-23-17
CHECKED	VPP	9-23-17
APPROVED	BJF	9-23-17

KOHLER.
KOHLER, WISCONSIN 53044

THIS DRAWING IN DESIGN AND DETAIL IS KOHLER CO. PROPERTY AND MUST NOT BE USED EXCEPT IN CONNECTION WITH KOHLER CO. WORK. ALL RIGHTS OF DESIGN OR INVENTION ARE RESERVED.

TITLE
DIMENSION PRINT, 14/20KW RCA

SCALE 0.16 | CAD NO. | SHEET 5 of 5
DWG NO. **ADV-8928** | **D**