Operation

Residential/Commercial Generator Sets

Models:

8.5/12/17/18RES
12/18TRES

Controller:
Advanced Digital Control ADC-RES

ISO 9001
KOHLER POWER SYSTEMS
NATIONALLY REGISTERED

KOHLER®
POWER SYSTEMS

TP-6515 1/11f

California Proposition 65

⚠ WARNING

Engine exhaust from this product contains chemicals known to the State of California to cause cancer, birth defects, or other reproductive harm.

Product Identification Information

Product identification numbers determine service parts. Record the product identification numbers in the spaces below immediately after unpacking the products so that the numbers are readily available for future reference. Record field-installed kit numbers after installing the kits.

Generator Set Identification Numbers

Record the product identification numbers from the generator set nameplate(s).

Model Designation _____

Specification Number _____

Serial Number _____

Accessory Number	Accessory Description

Controller Identification

Record the controller description from the generator set operation manual, spec sheet, or sales invoice.

Controller Description _____

Engine Identification

Record the product identification information from the engine nameplate.

Manufacturer _____

Model Designation _____

Serial Number _____

Table of Contents

Product Identification Information 2

Safety Precautions and Instructions 5

Introduction 9

Service Assistance 10

Section 1 Specifications 11
- 1.1 Introduction 11
- 1.2 Generator 11
- 1.3 Engine 11
- 1.4 Advanced Digital Control 11
- 1.5 Service Views for Maintenance 12

Section 2 Operation 15
- 2.1 Prestart Checklist 15
- 2.2 Exercising Generator Set 15
- 2.3 ADC-RES Controls and Indicators 15
  - 2.3.1 LED Display 15
  - 2.3.2 Controller Keypad 16
  - 2.3.3 Generator Set Master Switch 16
- 2.4 Controller Power 17
  - 2.4.1 Standby Mode 17
  - 2.4.2 Sleep Mode 17
- 2.5 Generator Set Operation 17
  - 2.5.1 Starting Generator Set 17
  - 2.5.2 Stopping Generator Set 17
  - 2.5.3 Resetting Emergency Stop Switch (TRES Models only) 18
- 2.6 Faults 19
  - 2.6.1 Shutdowns 19
  - 2.6.2 Warnings 19
  - 2.6.3 Resetting Controller after a Fault Shutdown 19
- 2.7 Battery Charger 21
  - 2.7.1 RES Battery Charger 21
  - 2.7.2 TRES Battery Charger 22

Section 3 Scheduled Maintenance 23
- 3.1 Scheduled Maintenance 23
  - 3.1.1 Service Schedule, 8.5/12 kW Models 24
  - 3.1.2 Service Schedule, 17/18 kW Models 25
- 3.2 Lubrication System 26
  - 3.2.1 Low Oil Pressure Shutdown 26
  - 3.2.2 Oil Check 26
  - 3.2.3 Engine Oil Recommendation 26
  - 3.2.4 Oil Change Procedure 26
  - 3.2.5 Oil Cooler, 17/18 kW 27
- 3.3 Spark Plugs 28
- 3.4 Air Cleaner Service 28
  - 3.4.1 Air Cleaner, 8.5/12RES 28
  - 3.4.2 Air Cleaner, 17/18RES 29
- 3.5 Cooling System 30
- 3.6 Exhaust System 30
- 3.7 Battery 31
- 3.8 Battery Charger 31

Table of Contents, continued

3.9 Circuit Protection 32
3.9.1 Line Circuit Breaker 32
3.9.2 Fuses 32
3.10 Storage Procedure 33
3.10.1 Lubricating System 33
3.10.2 Fuel System 33
3.10.3 Cylinder Lubrication 33
3.10.4 Exterior Preparation 33
3.10.5 Battery 33

Section 4 Troubleshooting 35
4.1 Introduction 35
4.2 Controller Troubleshooting 35
4.3 Generator Set Troubleshooting 35
4.4 Battery Charger Troubleshooting 37

Appendix A Abbreviations 39

IMPORTANT SAFETY INSTRUCTIONS. Electromechanical equipment, including generator sets, transfer switches, switchgear, and accessories, can cause bodily harm and pose life-threatening danger when improperly installed, operated, or maintained. To prevent accidents be aware of potential dangers and act safely. Read and follow all safety precautions and instructions. SAVE THESE INSTRUCTIONS.

This manual has several types of safety precautions and instructions: Danger, Warning, Caution, and Notice.

DANGER

Danger indicates the presence of a hazard that ***will cause severe personal injury, death***, or ***substantial property damage***.

WARNING

Warning indicates the presence of a hazard that ***can cause severe personal injury, death,*** or ***substantial property damage***.

CAUTION

Caution indicates the presence of a hazard that ***will*** or ***can cause minor personal injury*** or ***property damage***.

NOTICE

Notice communicates installation, operation, or maintenance information that is safety related but not hazard related.

Safety decals affixed to the equipment in prominent places alert the operator or service technician to potential hazards and explain how to act safely. The decals are shown throughout this publication to improve operator recognition. Replace missing or damaged decals.

Accidental Starting

WARNING

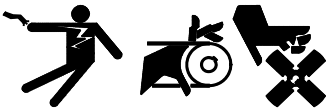

Accidental starting.
Can cause severe injury or death.

Disconnect the battery cables before working on the generator set. Remove the negative (–) lead first when disconnecting the battery. Reconnect the negative (–) lead last when reconnecting the battery.

Disabling the generator set. Accidental starting can cause severe injury or death. Before working on the generator set or connected equipment, disable the generator set as follows: (1) Move the generator set master switch to the OFF position. (2) Disconnect the power to the battery charger. (3) Remove the battery cables, negative (–) lead first. Reconnect the negative (–) lead last when reconnecting the battery. Follow these precautions to prevent starting of the generator set by an automatic transfer switch, remote start/stop switch, or engine start command from a remote computer.

Battery

WARNING

Sulfuric acid in batteries.
Can cause severe injury or death.

Wear protective goggles and clothing. Battery acid may cause blindness and burn skin.

WARNING

Explosion.
Can cause severe injury or death. Relays in the battery charger cause arcs or sparks.

Locate the battery in a well-ventilated area. Isolate the battery charger from explosive fumes.

Battery electrolyte is a diluted sulfuric acid. Battery acid can cause severe injury or death. Battery acid can cause blindness and burn skin. Always wear splashproof safety goggles, rubber gloves, and boots when servicing the battery. Do not open a sealed battery or mutilate the battery case. If battery acid splashes in the eyes or on the skin, immediately flush the affected area for 15 minutes with large quantities of clean water. Seek immediate medical aid in the case of eye contact. Never add acid to a battery after placing the battery in service, as this may result in hazardous spattering of battery acid.

Battery acid cleanup. Battery acid can cause severe injury or death. Battery acid is electrically conductive and corrosive. Add 500 g (1 lb.) of bicarbonate of soda (baking soda) to a container with 4 L (1 gal.) of water and mix the neutralizing solution. Pour the neutralizing solution on the spilled battery acid and continue to add the neutralizing solution to the spilled battery acid until all evidence of a chemical reaction (foaming) has ceased. Flush the resulting liquid with water and dry the area.

Battery gases. Explosion can cause severe injury or death. Battery gases can cause an explosion. Do not smoke or permit flames or sparks to occur near a battery at any time, particularly when it is charging. Do not dispose of a battery in a fire. To prevent burns and sparks that could cause an explosion, avoid touching the battery terminals with tools or other metal objects. Remove all jewelry before servicing the equipment. Discharge static electricity from your body before touching batteries by first touching a grounded metal surface away from the battery. To avoid sparks, do not disturb the battery charger connections while the battery is charging. Always turn the battery charger off before disconnecting the battery connections. Ventilate the compartments containing batteries to prevent accumulation of explosive gases.

Battery short circuits. Explosion can cause severe injury or death. Short circuits can cause bodily injury and/or equipment damage. Disconnect the battery before generator set installation or maintenance. Remove all jewelry before servicing the equipment. Use tools with insulated handles. Remove the negative (-) lead first when disconnecting the battery. Reconnect the negative (-) lead last when reconnecting the battery. Never connect the negative (-) battery cable to the positive (+) connection terminal of the starter solenoid. Do not test the battery condition by shorting the terminals together.

Engine Backfire/Flash Fire

⚠ WARNING

Fire.
Can cause severe injury or death.

Do not smoke or permit flames or sparks near fuels or the fuel system.

Servicing the air cleaner. A sudden backfire can cause severe injury or death. Do not operate the generator set with the air cleaner removed.

Servicing the fuel system. A flash fire can cause severe injury or death. Do not smoke or permit flames or sparks near the carburetor, fuel line, fuel filter, fuel pump, or other potential sources of spilled fuels or fuel vapors. Catch fuels in an approved container when removing the fuel line or carburetor.

Combustible materials. A fire can cause severe injury or death. Generator set engine fuels and fuel vapors are flammable and explosive. Handle these materials carefully to minimize the risk of fire or explosion. Equip the compartment or nearby area with a fully charged fire extinguisher. Select a fire extinguisher rated ABC or BC for electrical fires or as recommended by the local fire code or an authorized agency. Train all personnel on fire extinguisher operation and fire prevention procedures.

Exhaust System

⚠ WARNING

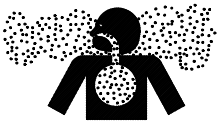

Carbon monoxide.
Can cause severe nausea, fainting, or death.

The exhaust system must be leakproof and routinely inspected.

Generator set operation. Carbon monoxide can cause severe nausea, fainting, or death. Carbon monoxide is an odorless, colorless, tasteless, nonirritating gas that can cause death if inhaled for even a short time. Avoid breathing exhaust fumes when working on or near the generator set. Never operate the generator set inside a building. Never operate the generator set where exhaust gas could seep inside or be drawn into a potentially occupied building through windows, air intake vents, or other openings.

Carbon monoxide symptoms. Carbon monoxide can cause severe nausea, fainting, or death. Carbon monoxide is a poisonous gas present in exhaust gases. Carbon monoxide is an odorless, colorless, tasteless, nonirritating gas that can cause death if inhaled for even a short time. Carbon monoxide poisoning symptoms include but are not limited to the following:

- Light-headedness, dizziness
- Physical fatigue, weakness in joints and muscles
- Sleepiness, mental fatigue, inability to concentrate or speak clearly, blurred vision
- Stomachache, vomiting, nausea

If experiencing any of these symptoms and carbon monoxide poisoning is possible, seek fresh air immediately and remain active. Do not sit, lie down, or fall asleep. Alert others to the possibility of carbon monoxide poisoning. Seek medical attention if the condition of affected persons does not improve within minutes of breathing fresh air.

Fuel System

⚠ WARNING

Explosive fuel vapors.
Can cause severe injury or death.

Use extreme care when handling, storing, and using fuels.

Gas fuel leaks. Explosive fuel vapors can cause severe injury or death. Fuel leakage can cause an explosion. Check the LP vapor gas or natural gas fuel system for leakage by using a soap and water solution with the fuel system test pressurized to 6–8 ounces per square inch (10–14 inches water column). Do not use a soap solution containing either ammonia or chlorine because both prevent bubble formation. A successful test depends on the ability of the solution to bubble.

Hazardous Noise

⚠ CAUTION

Hazardous noise.
Can cause hearing loss.

Never operate the generator set without a muffler or with a faulty exhaust system.

Engine noise. Hazardous noise can cause hearing loss. Generator sets not equipped with sound enclosures can produce noise levels greater than 105 dBA. Prolonged exposure to noise levels greater than 85 dBA can cause permanent hearing loss. Wear hearing protection when near an operating generator set.

Hazardous Voltage/ Moving Parts

⚠ WARNING

Hazardous voltage. Moving parts.
Can cause severe injury or death.

Operate the generator set only when all guards and electrical enclosures are in place.

⚠ WARNING

Hazardous voltage.
Backfeed to the utility system can cause property damage, severe injury, or death.

If the generator set is used for standby power, install an automatic transfer switch to prevent inadvertent interconnection of standby and normal sources of supply.

⚠ CAUTION

Welding the generator set.
Can cause severe electrical equipment damage.

Never weld components of the generator set without first disconnecting the battery, controller wiring harness, and engine electronic control module (ECM).

Grounding electrical equipment. Hazardous voltage can cause severe injury or death. Electrocution is possible whenever electricity is present. Ensure you comply with all applicable codes and standards. Electrically ground the generator set, transfer switch, and related equipment and electrical circuits. Turn off the main circuit breakers of all power sources before servicing the equipment. Never contact electrical leads or appliances when standing in water or on wet ground because these conditions increase the risk of electrocution.

Welding on the generator set. Can cause severe electrical equipment damage. Before welding on the generator set perform the following steps: (1) Remove the battery cables, negative (–) lead first. (2) Disconnect all engine electronic control module (ECM) connectors. (3) Disconnect all generator set controller and voltage regulator circuit board connectors. (4) Disconnect the engine battery-charging alternator connections. (5) Attach the weld ground connection close to the weld location.

Connecting the battery and the battery charger. Hazardous voltage can cause severe injury or death. Reconnect the battery correctly, positive to positive and negative to negative, to avoid electrical shock and damage to the battery charger and battery(ies). Have a qualified electrician install the battery(ies).

Short circuits. Hazardous voltage/current can cause severe injury or death. Short circuits can cause bodily injury and/or equipment damage. Do not contact electrical connections with tools or jewelry while making adjustments or repairs. Remove all jewelry before servicing the equipment.

Electrical backfeed to the utility. Hazardous backfeed voltage can cause severe injury or death. Install a transfer switch in standby power installations to prevent the connection of standby and other sources of power. Electrical backfeed into a utility electrical system can cause severe injury or death to utility personnel working on power lines.

⚠ WARNING

Airborne particles.
Can cause severe injury or blindness.

Wear protective goggles and clothing when using power tools, hand tools, or compressed air.

Heavy Equipment

⚠ WARNING

Unbalanced weight.
Improper lifting can cause severe injury or death and equipment damage.

Do not use lifting eyes.
Lift the generator set using lifting bars inserted through the lifting holes on the skid.

Hot Parts

⚠ WARNING

Hot engine and exhaust system. Can cause severe injury or death.

Do not work on the generator set until it cools.

Servicing the exhaust system. Hot parts can cause severe injury or death. Do not touch hot engine parts. The engine and exhaust system components become extremely hot during operation.

Servicing the engine heater. Hot parts can cause minor personal injury or property damage. Install the heater before connecting it to power. Operating the heater before installation can cause burns and component damage. Disconnect power to the heater and allow it to cool before servicing the heater or nearby parts.

Notice

NOTICE

Canadian installations only. For standby service connect the output of the generator set to a suitably rated transfer switch in accordance with Canadian Electrical Code, Part 1.

This manual provides operation and maintenance instructions for residential/commercial generator sets equipped with ADC-RES controls. The generator set models covered by this manual are listed on the front cover.

This generator set is approved for use in stationary applications in locations served by a reliable utility power source. Have the generator set installed by an authorized distributor/dealer or service technician. Refer to TP-6514, Installation Manual, for installation instructions.

Information in this publication represents data available at the time of print. Kohler Co. reserves the right to change this publication and the products represented without notice and without any obligation or liability whatsoever.

Read this manual and carefully follow all procedures and safety precautions to ensure proper equipment operation and to avoid bodily injury. Read and follow the Safety Precautions and Instructions section at the beginning of this manual. Keep this manual with the equipment for future reference.

The equipment service requirements are very important to safe and efficient operation. Inspect the parts often and perform required service at the prescribed intervals. Obtain service from an authorized service distributor/ dealer to keep equipment in top condition.

Nameplate

The following illustration shows a typical generator set nameplate. Copy the model, serial, and specification numbers from the nameplate into the spaces provided in the product information section on the inside front cover of this manual. See Section 1.5 for the nameplate location.

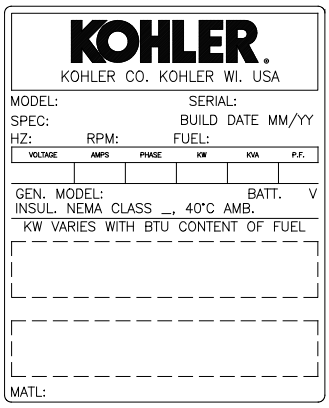

Emission Information

The Kohler® Model CH640 engine used on the model 8.5RES generator set, CH740 engine used on the 12RES generator set, and CH980 engine used on the 17/18RES generator set are certified to operate using natural gas or propane fuel.

The Emission Compliance Period referred to on the Emission Control or Air Index label indicates the number of operating hours for which the engine has been shown to meet CARB or EPA emission requirements. The following table provides the engine compliance period (in hours) associated with the category descriptor, which may be found on the certification label.

Emission Compliance Period			
EPA	Category C 250 hours	Category B 500 hours	Category A 1000 hours
CARB	Moderate 125 hours	Intermediate 250 hours	Extended 500 hours

Figure 1 Emission Compliance Period

Refer to the certification label for engine displacement.

The exhaust emission control system for the CH640, CH740, and CH980 engines is EM for U.S. EPA, California, and Europe.

The engine used in the Model 17/18RES generator set is certified for emergency standby use only.

For professional advice on generator set power requirements and conscientious service, please contact your nearest Kohler distributor or dealer.

- Consult the Yellow Pages under the heading Generators—Electric.
- Visit the Kohler Power Systems website at KohlerPower.com.
- Look at the labels and stickers on your Kohler product or review the appropriate literature or documents included with the product.
- Call toll free in the US and Canada 1-800-544-2444.
- Outside the US and Canada, call the nearest regional office.

Headquarters Europe, Middle East, Africa (EMEA)
Kohler Power Systems
3 rue de Brennus
93200 Saint Denis
France
Phone: (33) 1 49 178300
Fax: (33) 1 49 178301

Asia Pacific
Power Systems Asia Pacific Regional Office
Singapore, Republic of Singapore
Phone: (65) 6264-6422
Fax: (65) 6264-6455

China
North China Regional Office, Beijing
Phone: (86) 10 6518 7950
(86) 10 6518 7951
(86) 10 6518 7952
Fax: (86) 10 6518 7955

East China Regional Office, Shanghai
Phone: (86) 21 6288 0500
Fax: (86) 21 6288 0550

India, Bangladesh, Sri Lanka
India Regional Office
Bangalore, India
Phone: (91) 80 3366208
(91) 80 3366231
Fax: (91) 80 3315972

Japan, Korea
North Asia Regional Office
Tokyo, Japan
Phone: (813) 3440-4515
Fax: (813) 3440-2727

Latin America
Latin America Regional Office
Lakeland, Florida, USA
Phone: (863) 619-7568
Fax: (863) 701-7131

1.1 Introduction

The generator set specification sheets provide specific generator and engine information. Refer to the spec sheet for data not supplied in this manual. Consult the generator set service manual, engine operation manual, and engine service manual for additional specifications. Obtain copies of the latest spec sheets, manuals, diagrams, and drawings from your local distributor/ dealer.

1.2 Generator

The generator uses Kohler's unique PowerBoost™ voltage regulation system, which provides instant response to load changes.

PowerBoost™ ensures reliable motor starting and consistent voltage levels. PowerBoost™ utilizes a voltage excitation system that employs a winding independent of the main output windings to provide excitation voltage.

1.3 Engine

The generator set has a four-cycle, twin cylinder, air-cooled Kohler® engine. The engine operates on clean-burning natural gas or propane (LP) vapor. Engine features include:

- Efficient overhead valve design and full pressure lubrication for maximum power, torque, and reliability under all operating conditions.
- Dependable, maintenance-free electronic ignition.
- Precision-formulated cast iron construction of parts subjected to the most wear and tear.
- Field-convertible multi-fuel systems that allow fuel changeover from natural gas to LP vapor (and vice-versa) while maintaining CARB emission certification.
- Digital spark advance optimizes ignition timing for the selected fuel. (12 –18 kW models)

1.4 Advanced Digital Control

The generator set is equipped with the Kohler® ADC-RES Advanced Digital Control. Controller features include the following:

- Compact controller
- Integrally mounted to the generator set
- LED display:
  - Engine runtime, hours
  - AC voltage
  - Frequency (Hz)
  - Battery voltage
  - Crank cycle status
  - Setup information
  - Application software version
- LED display communicates faults:
  - High battery voltage
  - High engine temperature
  - Low battery voltage
  - Low oil pressure
  - Overcrank safety
  - Overfrequency
  - Overspeed
  - Overvoltage
  - Underfrequency
  - Undervoltage
- Membrane keypad for configuration and adjustment
  - Password-protected user access to menus
  - Voltage, gain, and speed adjustment
  - System configuration (system voltage/frequency settings and generator set model)
- Remote two-wire start/stop capability
- Digital isochronous governor to maintain steady-state speed at all loads
- Digital voltage regulation: ±1.5% RMS no-load to full-load
- Automatic start for programmed cranking cycle
- Master control switch mounted on the junction box: Run/Off-Reset/Auto
- Upgradeable application software

1.5 Service Views for Maintenance

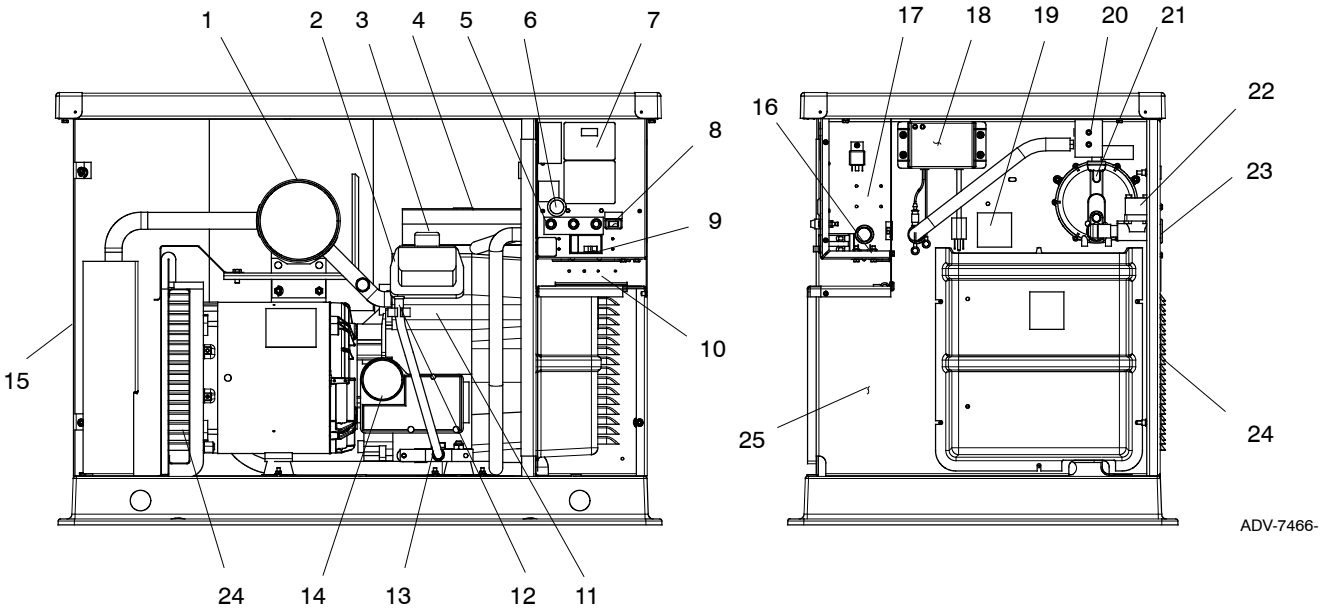

1. Muffler
2. Oil check
3. Oil fill
4. Air cleaner
5. Fuses
6. RS-232 connector (for application program updates)
7. Controller user interface (see Figure 2-1)
8. Generator set master switch (RUN-OFF/RESET-AUTO)
9. Line circuit breaker (single-phase models)*
10. Field-connection terminal block location (single-phase models)*
11. Spark plug locations (both sides)
12. Oil drain hose
13. Oil drain valve
14. Oil filter
15. Exhaust
16. Equipment ground
17. Relay board location (optional)
18. Battery charger (single-phase models)†
19. DSAI lead location (12 kW models)
20. Fuel block
21. Gas regulator assembly
22. Fuel solenoid valve
23. Fuel inlet
24. Air intake
25. Engine starting battery location (battery purchased separately)

* See Figure 1-3 for additional components for 3-phase models.

† See Figure 2-9 for 3-phase battery charger locations.

Figure 1-1 Generator Set Components, 8.5/12 kW

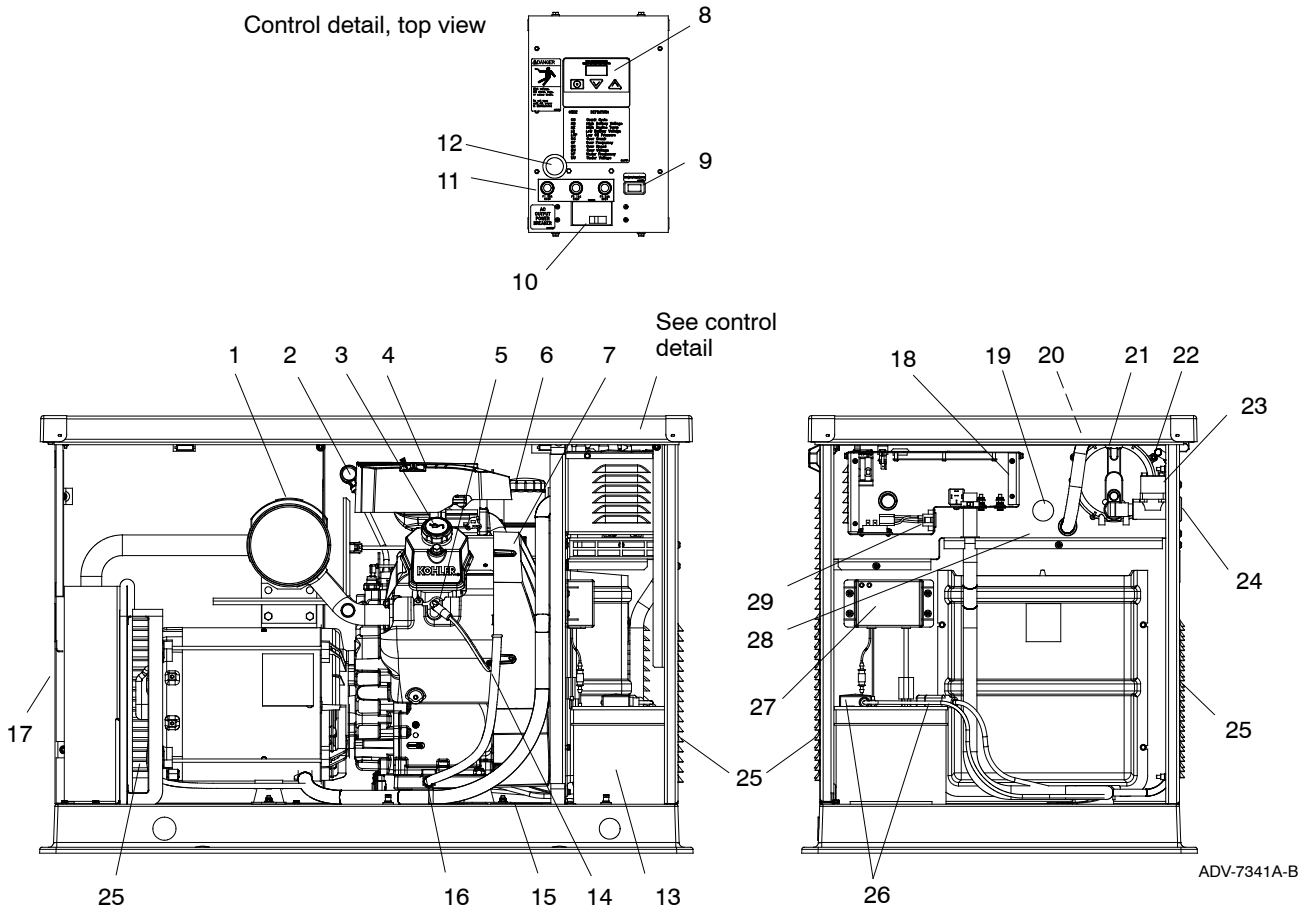

1. Muffler
2. Oil check
3. Oil fill
4. Air cleaner
5. Spark plug locations (both sides)
6. Oil filter
7. Oil cooler location
8. ADC-RES Advanced Digital Control user interface
9. Generator set master switch (RUN-OFF/RESET-AUTO)
10. Line circuit breaker (single-phase models)*
11. Fuses
12. RS-232 connector (for application program updates)
13. Engine starting battery location (battery purchased separately)
14. Oil drain hose
15. Nameplate location (on base)
16. Oil drain valve
17. Exhaust outlet
18. Relay board location (optional)
19. Carburetor heater access opening
20. LP fuel orifice location (inside hose fitting)
21. Gas regulator assembly
22. DSAI leads
23. Fuel solenoid valve
24. Fuel inlet
25. Air intake
26. Battery cables
27. Battery charger (single-phase models)†
28. Field-connection terminal block location (single-phase models)*
29. 120 VAC receptacles for battery charger and optional carburetor heater (single-phase models)

* See Figure 1-3 for additional components for 3-phase models.

† See Figure 2-9 for 3-phase battery charger locations.

Figure 1-2 Generator Set Components, 17/18 kW

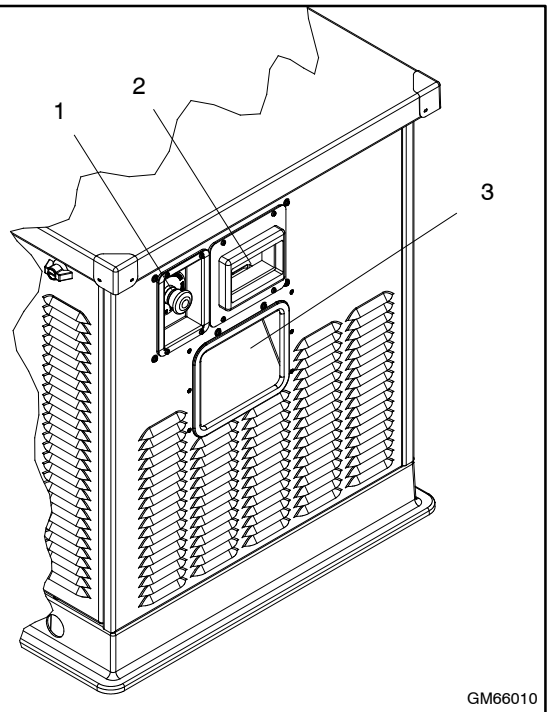

1. Emergency stop switch
2. Field-connection terminal block and circuit breakers
3. Cable inlet area

Figure 1-3 Additional Components, TRES (3-phase) Models

2.1 Prestart Checklist

To ensure continued satisfactory operation, perform the following checks or inspections before or at each startup, as designated, and at the intervals specified in the service schedule. In addition, some checks require verification after the unit starts.

Air Cleaner. Check for a clean and installed air cleaner element to prevent unfiltered air from entering the engine.

Air Inlets. Check for clean and unobstructed air inlets.

Battery. Check for tight battery connections. Consult the battery manufacturer's instructions regarding battery care and maintenance.

Exhaust System. Check for exhaust leaks and blockages. Check the muffler condition and check for tight exhaust system connections.

Inspect the exhaust system components for cracks, leaks, and corrosion.

- Check for corroded or broken metal parts and replace them as needed.
- Check that the exhaust outlet is unobstructed.

Oil Level. Maintain the oil level at or near, not over, the full mark on the dipstick.

Operating Area. Check for obstructions that could block the flow of cooling air. Keep the air intake area clean. Do not leave rags, tools, or debris on or near the generator set.

2.2 Exercising Generator Set

Operate the generator set without load once each week for 20 minutes. If the generator set is not connected to an automatic transfer switch (ATS) with an exercise option, exercise the unit in the presence of an operator.

The operator should perform all of the prestart checks before starting the exercise procedure. Start the generator set according to the starting procedure in the controller section of this manual. While the generator set is operating, listen for a smooth-running engine and visually inspect the generator set for fluid or exhaust leaks. Check the air inlets and outlets and remove any items restricting the air flow.

2.3 ADC-RES Controls and Indicators

Figure 2-1 illustrates the ADC-RES user interface and other items on the generator set junction box. Figure 2-2 describes the ADC-RES controls and indicators.

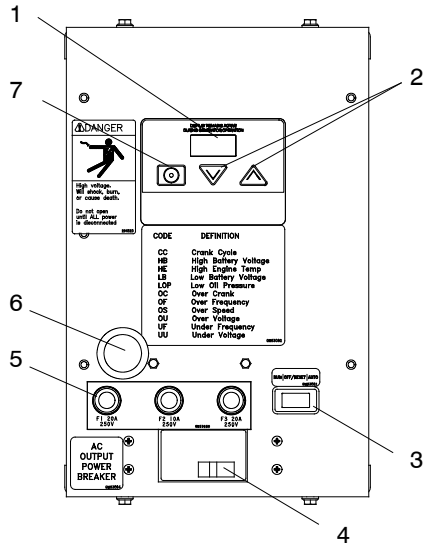

1. LED display
2. Up and down arrow buttons
3. Generator set master switch
4. Line circuit breaker (single-phase models)
5. Fuses
6. RS-232 connector (for application program upgrade)
7. Select button (use for setup and adjustment only)

Figure 2-1 ADC-RES Controls

2.3.1 LED Display

The LED display is activated by a start or RUN command as follows:

- Move the master switch to RUN.
- With the master switch in AUTO, send a remote start command (close the remote start contact across leads 3 and 4).

The LED display indicates generator set status as shown in Figure 2-2. When the generator set is running, engine runtime hours are shown unless the arrow buttons are used to step through the other displays as described in Section 2.3.2.

When the master switch is in AUTO, the display may turn off 48 hours after generator set shutdown. See Section 2.4, Controller Power.

Control or Indicator	Item	Description
LED display	Runtime hours	Displays total generator set runtime hours while the generator set is running and when no other codes are displayed.
	Metering display	Displays AC voltage (output), frequency, and battery voltage. Press the up or down arrow when runtime hours are displayed to step through these displays.
	Crank indication	Displays CC_1, CC_2, or CC_3 to indicate the first, second, or third attempt to start the engine. The last digit flashes during the crank cycle rest periods.
	Software version number	The software version number (v#.##) is displayed when entering configuration mode. See the installation manual.
	Fault codes	Flashes a 2- or 3-letter fault code to indicate various fault conditions. See Section 2.6.
Keypad	Select and arrow buttons	Use the arrow buttons to step through the data displays. See Figure 2-3. The keypad is also used for controller setup and adjustment. The setup and adjustment functions are password-protected. Have setup and adjustments performed only by an authorized distributor/dealer.
Generator set master switch	Three-position switch	Switch functions as the generator set operation and controller reset switch.

Figure 2-2 ADC-RES Controls and Indicators

2.3.2 Controller Keypad

The three buttons on the controller keypad are Select, Up, and Down. See Figure 2-1.

When the generator set is running, the up and down arrow buttons can be used to step through system data displays as shown in Figure 2-3. After 10 seconds, the display returns to engine runtime hours.

The buttons on the controller keypad are also used for system configuration and adjustment. The system configuration is factory-set and should not require changes under normal operating conditions. Contact an authorized distributor/dealer or service technician if adjustments are required.

2.3.3 Generator Set Master Switch

The generator set master switch is located on the junction box below the ADC-RES user interface. The master switch positions are RUN, OFF/RESET, and AUTO. See Section 2.5 for operation instructions.

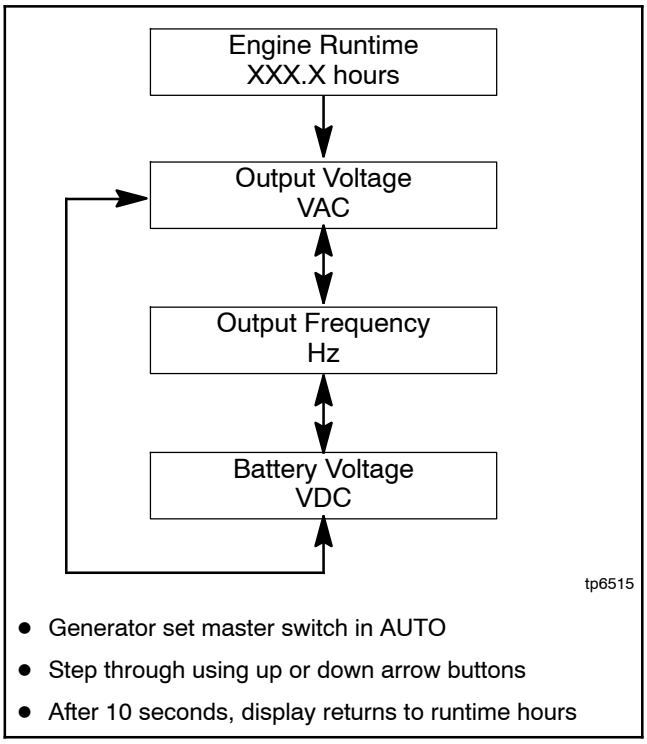

Figure 2-3 Data Displays

2.4 Controller Power

The ADC-RES is powered by the generator set engine starting battery.

Note: The generator sets are equipped with factory-installed battery chargers to prevent battery discharge. The battery charger must be connected to utility power.

2.4.1 Standby Mode

When the generator set master switch is in the AUTO position and the engine is not running, the controller is in standby mode. Engine runtime hours are shown on the display. A remote start signal (contact closure) will start and run the generator set.

The controller can be set to go into sleep mode if there is no start signal for 48 hours.

2.4.2 Sleep Mode

Controllers with application code version 1.13 or higher are shipped with the sleep mode disabled and J1939 communication enabled. The controller will remain in standby mode whenever the master switch is in AUTO and the engine is not running.

Communication parameter Cn can be changed to disable communication and enable the sleep mode if remote communication is not required. See Installation Manual TP-6514 for instructions to change parameter Cn.

Sleep Mode. If the controller communication is disabled and the generator set master switch is in the AUTO position, the controller powers down automatically after 48 hours of inactivity. The controller display is dark and battery draw is minimized. A remote start signal from a transfer switch or a remote start/stop switch connected to controller leads 3 and 4 reactivates the controller. Moving the generator set master switch to the RUN position also activates the controller.

2.5 Generator Set Operation

2.5.1 Starting Generator Set

Local Starting

Move the generator set master switch to the RUN position to immediately start the generator set.

Auto (Automatic) Starting

Move the generator set master switch to the AUTO position to allow startup by an automatic transfer switch (ATS) or remote start/stop switch, if equipped. Close a contact across engine start leads 3 and 4 to signal the controller to start the generator set.

Crank Cycle

The controller attempts to start the generator set three times (three crank cycles, 15 seconds crank and 15 seconds off). See Figure 2-2 for display information during the crank cycle. If the generator set does not start in three attempts, the system shuts down on an overcrank fault. See Section 2.6.

2.5.2 Stopping Generator Set

Local Stopping

1. Run the generator set with no load for at least 2 minutes to ensure adequate engine cooldown.
2. Move the generator set master switch to the OFF/RESET position. The engine stops.

Automatic Stopping

With the generator set master switch in the AUTO position, open the contact across engine start leads 3 and 4 to signal the generator set to stop.

An automatic transfer switch (ATS) connected to controller leads 3 and 4 operates as follows:

1. The ATS disconnects the load from the generator set.
2. If the ATS is equipped with an engine cooldown time delay, the generator set continues to run for a preset engine cooldown time.

   Note: There is no engine cooldown time delay on the ADC-RES controller.

3. The ATS opens the connection between controller leads 3 and 4. The generator set shuts down. The controller enters standby mode and displays engine runtime hours.

Emergency Stopping (TRES Models Only)

Push the red emergency stop switch for immediate generator set shutdown in the case of an emergency. See Figure 2-4 for the emergency stop switch location.

The emergency stop switch shuts down the generator set immediately. The controller display shows AF (auxiliary fault) when the emergency stop button is activated.

Use the generator set master switch for normal shutdowns.

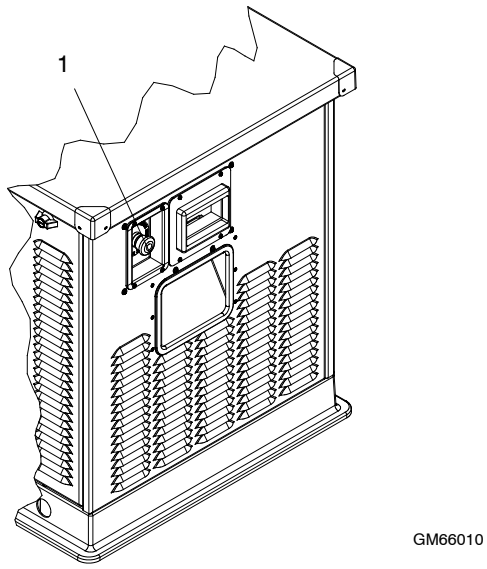

1. Emergency stop switch

Figure 2-4 Emergency Stop Switch, TRES Models

2.5.3 Resetting Emergency Stop Switch (TRES Models only)

Use the following procedure to reset the generator set after shutdown by the emergency stop switch. See Section 2.6.3 to reset the generator set after a fault shutdown.

1. Place the generator set master switch in the OFF/RESET position.
2. Investigate and correct the cause of the emergency stop.
3. Rotate the emergency stop switch knob clockwise and release it. Check that the knob returns to the deactivated (out) position.
4. Move the generator set master switch to the RUN or AUTO position to restart the generator set. Verify that the controller display no longer shows a fault code. The generator set engine will not start until the reset procedure is complete.

2.6 Faults

2.6.1 Shutdowns

Under the fault shutdown conditions listed in Figure 2-5, the generator set shuts down automatically and the controller displays a fault code. The generator set cannot be restarted until the fault condition is corrected and the controller is reset. See Section 2.6.3 to reset the controller after a fault shutdown.

The shutdown switches on the generator set will automatically reset when the problem is corrected. For example, the high engine temperature switch resets automatically when the generator set cools. However, the fault does not clear until the controller is reset.

2.6.2 Warnings

The controller displays a fault code but the generator set does not shut down on a high battery voltage warning or a low battery voltage warning. The controller resets automatically after a battery voltage fault condition is corrected.

2.6.3 Resetting Controller after a Fault Shutdown

Always identify and correct the cause of a fault shutdown before resetting the controller. Check the fault code displayed on the ADC-RES and refer to Figure 2-5 to identify and correct the fault condition before proceeding.

Use the following procedure to reset the generator set controller after a fault shutdown.

1. Move the generator set master switch to OFF/ RESET.
2. Disconnect the generator set from the load using the line circuit breaker or ATS. See the safety precautions at the beginning of this manual before proceeding.
3. Identify and correct the cause of the fault shutdown. See the safety precautions at the beginning of this manual before proceeding. Refer to Section 4, Troubleshooting.
4. Start the generator set by moving the generator set master switch to RUN. Test operate the generator set to verify that the cause of the shutdown has been corrected.
5. Move the generator set master switch to OFF/ RESET.
6. Reconnect the generator set to the load using the line circuit breaker or ATS.
7. Move the generator set master switch to the AUTO position for startup by remote transfer switch or remote start/stop switch.

   Note: The controller's LED display remains off until an engine start command is received.

Code	Fault	Description	Check
AF	Auxiliary fault input shutdown	Indicates a shutdown initiated by pushing the emergency stop switch. (TRES models only) Not used on RES models.	Check the position of the emergency stop button. (TRES models only)
HE	High engine temperature shutdown	Shutdown occurs if the engine coolant temperature exceeds the maximum temperature for more than 5 seconds. This function becomes active after the engine reaches the crank disconnect speed.	Check for blocked air inlets and exhaust outlets.
LOP	Low oil pressure shutdown	Shutdown occurs if a low oil pressure condition exists for more than 5 seconds. This function becomes active 30 seconds after the engine has reached crank disconnect speed (30 second inhibit). **Note:** The low oil pressure shutdown does not protect against low oil level. Check the oil level at the engine.	Check for leaks in the lubrication system. Check the oil level and add oil if the level is low.
OC	Overcrank shutdown	Shutdown occurs after 3 unsuccessful starting attempts. The crank cycle is set for three starting attempts of 15 seconds cranking and 15 seconds rest.	Check the fuel supply, spark plug, and battery. Check for loose connections. Contact an authorized distributor/dealer for service if problem continues.
	Locked rotor	The generator set also shuts down on OC if no engine rotation is sensed during cranking. Shuts down 3 seconds after the fault is detected.	
OF	Overfrequency shutdown	Shutdown occurs when the governed frequency exceeds 110% of the system's frequency setpoint for more than 5 seconds. This function becomes active 10 seconds after engine start (10 second inhibit).	Contact an authorized distributor/dealer for service if problem continues.
OS	Overspeed shutdown	Shutdown occurs if the engine speed exceeds 110% of the normal running speed for more than 0.3 seconds.	Contact an authorized distributor/dealer for service if problem continues.
OU	Overvoltage shutdown	Shutdown occurs if the voltage exceeds 120% of the system nominal voltage for more than 2 seconds.	Contact an authorized distributor/dealer for service if problem continues.
UF	Underfrequency shutdown	Shutdown occurs if the governed frequency falls below 54 Hz for more than 5 seconds. Shutdown also occurs if the governed frequency falls below 56.5 Hz for more than 60 seconds. This function becomes active 10 seconds after engine start. (10 second inhibit).	Reduce the load and restart the generator set. Contact an authorized distributor/dealer for service if problem continues.
UU	Undervoltage shutdown	Shutdown occurs if the voltage falls below 80% of the nominal system voltage for more than 10 seconds.	Reduce the load and restart the generator set. Contact an authorized distributor/dealer for service if problem continues.
HB	High battery voltage warning	Fault code is displayed if the engine starting battery voltage rises above 16 VDC for more than 30 seconds when the engine is running. Not operative during the engine crank cycle, this fault condition does not inhibit engine starting. The fault condition clears when the battery voltage returns to an acceptable level.	Check the battery rating and condition. Check the battery charger operation.
LB	Low battery voltage warning	Fault code is displayed if the engine starting battery voltage falls below 11 VDC for more than 30 seconds when the engine is not running. Not operative during the engine crank cycle, this fault condition does not inhibit engine starting. The fault condition clears when the battery voltage returns to an acceptable level.	Check the battery rating and condition. Check the battery charger operation. Charge or replace the battery.

Figure 2-5 ADC-RES Fault Codes

2.7 Battery Charger

2.7.1 RES Battery Charger

RES model generator sets are equipped with a 6-amp float/equalize battery charger to maintain the engine starting battery. The charger's power cord must be connected to a 120 VAC power source. Figure 2-6 illustrates the battery charger.

The battery charger uses an AGS 10 inline fuse. The fuse is located in the battery lead. See Figure 2-6.

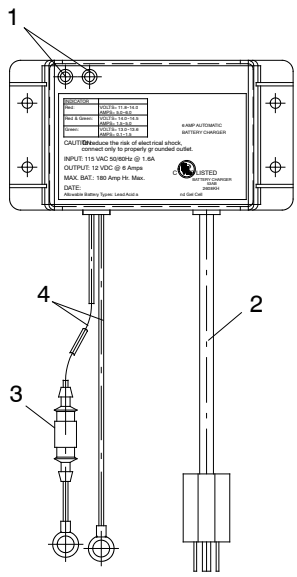

1. LED indicators
2. AC power cord
3. Fuse
4. Battery leads, 12 VDC

Figure 2-6 6-Amp Float/Equalize Battery Charger

Battery Charger Operation

Figure 2-7 illustrates the three-stage charging method. Red and green LEDs indicate charger operation. The chart in Figure 2-8 describes the LED indicator operation during each stage of the charging process. See Section 4.4 for battery charger troubleshooting information, if necessary.

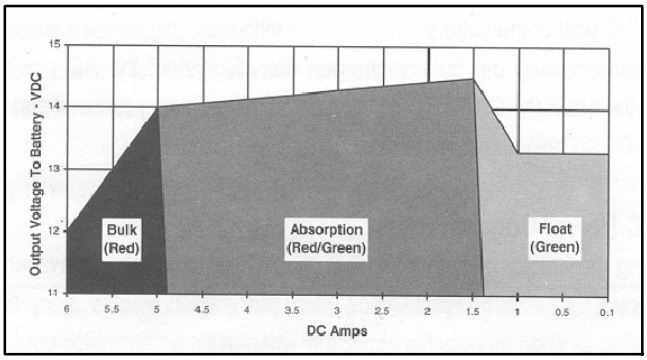

Figure 2-7 Charging Method

Display	Operating Condition
Red ON Green OFF	When the red LED is on, it indicates the battery is discharged and the battery charger is recharging at the BULK rate (stage 1). This charging rate is 6 amps. While the red LED is on, the voltage measured (with the battery charger on) will be 11.8–14 volts. If the red LED stays on for more than 24 hours, refer to Section 4.4 in this manual.
Red ON Green ON	When both the green and the red LEDs are on, the battery charger is charging at an ABSORPTION rate of between 1.5 and 5 amps (stage 2). This mode of charging gradually tops off your battery, and reduces harmful sulfating. While both LEDs are on, the voltage measured (with the battery charger on) should be approximately 14.0–14.5 VDC. If both LEDs stay on longer than 24 hours, refer to Section 4.4 in this manual.
Red OFF Green ON	When the green LED is on, the battery charger is charging at a FLOAT or MAINTENANCE rate of less than 1.5 amps (stage 3). Your battery is now 90% charged and ready for use. This float charging current will gradually decrease to as low as 0.1 amps as the battery reaches 100% charge. It will now be kept at full charge without overcharging. If the green LED stays on when your battery is known to be low, refer to Section 4.4 in this manual.

Figure 2-8 Battery Charger LED Indicator Functions

2.7.2 TRES Battery Charger

Three-phase model TRES generator sets are equipped with a 2.5-amp battery charger to maintain the engine starting battery. Utility power must be supplied to the generator set for the battery charger.

The battery charger is located in or near the controller junction box. See Figure 2-9 for the battery charger location.

A green LED on the side of the battery charger indicates battery charger operation. See Figure 2-10.

Two internal fuses protect the battery charger. See Section 4.4 for battery charger troubleshooting information, if necessary.

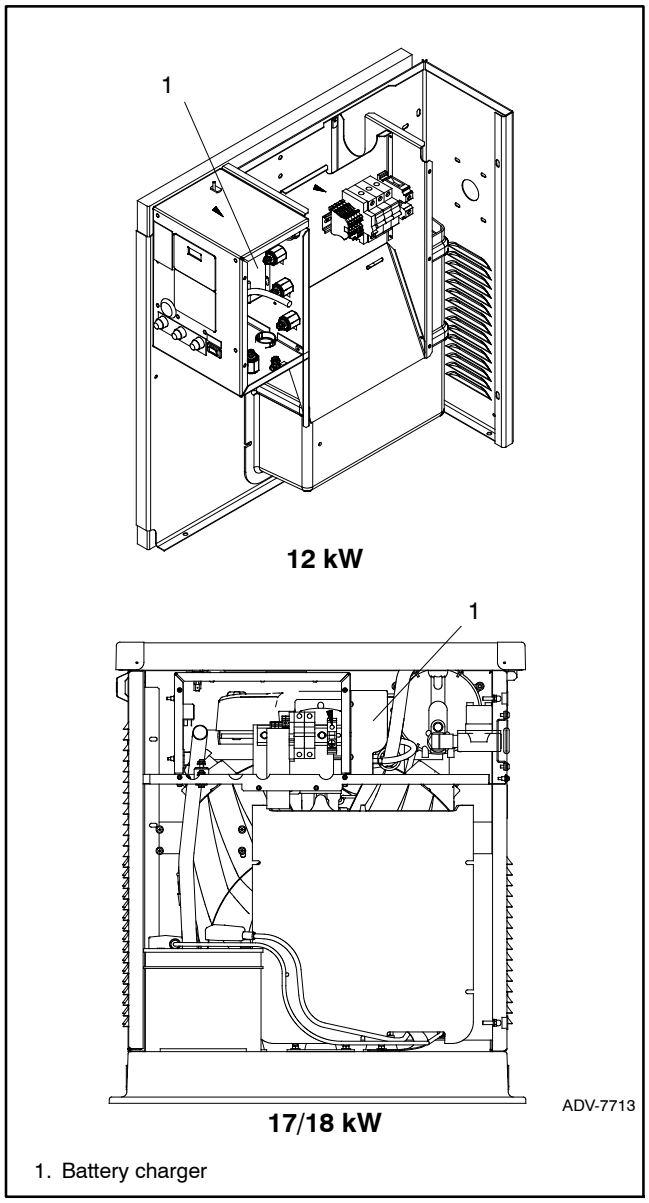

Figure 2-9 Battery Charger Location, TRES (3-phase) Models

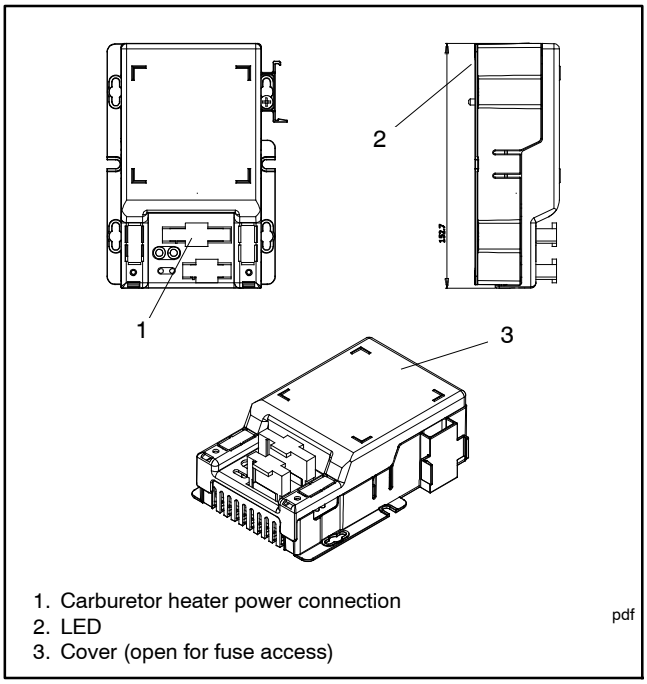

Figure 2-10 Battery Charger for 3-Phase Models

⚠ WARNING

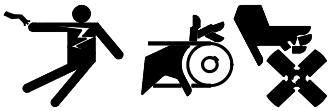

Accidental starting.
Can cause severe injury or death.

Disconnect the battery cables before working on the generator set. Remove the negative (–) lead first when disconnecting the battery. Reconnect the negative (–) lead last when reconnecting the battery.

Disabling the generator set. Accidental starting can cause severe injury or death. Before working on the generator set or connected equipment, disable the generator set as follows: (1) Move the generator set master switch to the OFF position. (2) Disconnect the power to the battery charger. (3) Remove the battery cables, negative (–) lead first. Reconnect the negative (–) lead last when reconnecting the battery. Follow these precautions to prevent starting of the generator set by an automatic transfer switch, remote start/stop switch, or engine start command from a remote computer.

⚠ WARNING

Hot engine and exhaust system.
Can cause severe injury or death.

Do not work on the generator set until it cools.

Servicing the exhaust system. Hot parts can cause severe injury or death. Do not touch hot engine parts. The engine and exhaust system components become extremely hot during operation.

⚠ WARNING

Hazardous voltage. Moving parts.
Can cause severe injury or death.

Operate the generator set only when all guards and electrical enclosures are in place.

Servicing the generator set when it is operating. Exposed moving parts can cause severe injury or death. Keep hands, feet, hair, clothing, and test leads away from the belts and pulleys when the generator set is running. Replace guards, screens, and covers before operating the generator set.

3.1 Scheduled Maintenance

Refer to the following service schedules and the runtime hours displayed on the ADC-RES display to schedule routine maintenance. Intervals are shown in hours of operation and/or time intervals (i.e. weekly, monthly, quarterly, etc.) Have an authorized distributor/dealer service the generator set at the designated intervals in the service schedule for the life of the generator set. Service units subject to extreme weather, long operating hours, or dusty or dirty conditions more frequently.

Contact an authorized distributor/dealer for parts.

3.1.1 Service Schedule, 8.5/12 kW Models

System Component or Procedure	See Section	Procedure: Visually Inspect	Check	Change	Clean	Test	Frequency
Fuel							
Flexible lines and connections		X		R			Quarterly
Main tank supply level			X				Weekly
Fuel piping		X					Yearly
Lubrication	3.2						
Oil level		X	X				8 hours or before use
Crankcase breather hose		X					Yearly or 500 hours
Change oil				X			Yearly or 100 hours
Replace filter				X			Yearly or 200 hours
Cooling	3.5						
Air ducts, louvers			X		X		Yearly
Exhaust Line	3.6						
Leakage		X	X				Weekly
Insulation, fire hazards		X					Yearly
Obstructions or combustible materials near exhaust outlet		X					Weekly
DC Electrical System	3.7						
Battery charger operation, charge rate (if equipped)		X					Monthly
Remove corrosion, clean and dry battery and rack		X			X		Yearly
Clean and tighten battery terminals and inspect boots		X	X				Yearly
Battery electrolyte level and specific gravity *			X				Yearly
AC Electrical System							
Tighten control and power wiring connections			X				Yearly
Remote control system, if equipped						X	Monthly
Visible wear or damage		X					Quarterly
Wire abrasions where subject to motion		X	X				Six Months
Wire-cable insulation condition		X					3 Years or 500 hours
Engine and Mounting							
Visible wear or damage		X					Weekly
Air cleaner and precleaner service †	3.4			R			Yearly or 100 hours
Spark plugs	3.3			X			Yearly or 300 hours
Replace stepper motor coupling and bushing				D			500 hours
Generator							
Visible wear or damage		X					Quarterly
Exercise generator set						X	Weekly
Brushes and collector ring		D			D		Yearly
Measure and record resistance readings of windings with insulation tester (Megger®, with SCR assembly or rectifier and load leads disconnected) *						D	3 Years
General Condition of Equipment							
Evidence of vibration, leakage, excessive noise, temperature, or deterioration		X	X		X		Weekly
Interior of sound enclosure		X			X		Quarterly

* *Not necessary for maintenance-free batteries.
† Service more frequently under extremely dusty/dirty conditions.
Megger® is a registered trademark of Biddle Instruments.

X Action
D Authorized distributor/dealer only
R Replace as necessary

3.1.2 Service Schedule, 17/18 kW Models

System Component or Procedure	See Section	Procedure: Visually Inspect	Check	Change	Clean	Test	Frequency
Fuel							
Flexible lines and connections		X		R			Quarterly
Main tank supply level			X				Weekly
Fuel piping		X					Yearly
Lubrication	3.2						
Oil level			X				8 hours or before each use
Change oil				X			Yearly or 150 hours
Replace filter				X			Yearly or 150 hours
Crankcase breather hose		X					Yearly or 500 hours
Oil cooler		X			X		Yearly or 100 hours
Cooling	3.5						
Air ducts, louvers			X		X		Yearly
Exhaust System	3.6						
Leakage		X	X				Weekly
Insulation, fire hazards		X					Yearly
Obstructions or combustible materials near exhaust outlet		X					Weekly
DC Electrical System	3.7						
Battery charger operation, charge rate		X					Monthly
Remove corrosion, clean and dry battery and rack		X			X		Yearly
Clean and tighten battery terminals and inspect boots		X	X				Yearly
Battery electrolyte level and specific gravity *			X				Yearly
AC Electrical System							
Tighten control and power wiring connections			X				Yearly
Remote control system, if equipped						X	Monthly
Visible wear or damage		X					Quarterly
Wire abrasions where subject to motion		X	X				Six Months
Wire-cable insulation condition		X					3 Years or 500 hours
Engine and Mounting							
Visible wear or damage		X					Weekly
Air cleaner service †	3.4		150	300			Yearly or hours shown
Spark plugs	3.3		150	300			Yearly or hours shown
Replace stepper motor coupling and bushing				D			500 hours
Generator							
Visible wear or damage		X					Quarterly
Exercise generator set						W	Weekly
Brushes and collector ring		D			D		Yearly
Measure and record resistance readings of windings with insulation tester (Megger®, with SCR assembly or rectifier and load leads disconnected)						D	3 Years
General Condition of Equipment							
Evidence of vibration, leakage, deterioration, unusual or excessive noise or temperature		X	X		X		Weekly
Interior of sound enclosure		X			X		Quarterly

* Not necessary for maintenance-free batteries.
† Service more frequently under extremely dusty/dirty conditions.
Megger® is a registered trademark of Biddle Instruments.

X = Action
D Authorized distributor/dealer only
R Replace as necessary

3.2 Lubrication System

See the service schedules in Section 3.1 for oil change and oil filter replacement intervals. See the service views in Section 1.5 for the oil drain, oil check, oil fill, and oil filter locations.

3.2.1 Low Oil Pressure Shutdown

The low oil pressure (LOP) shutdown feature protects the engine against internal damage if the oil pressure drops below a minimum pressure because of oil pump failure or other malfunction.

Note: The LOP shutdown feature does not protect against damage caused by operating when the oil level is low; it is not a low oil level shutdown. Check the oil level regularly, and add oil as needed.

3.2.2 Oil Check

The generator set is shipped with oil. Before operating the generator set, check the engine oil in the crankcase. See Figure 3-1.

Maintain the oil level at or near, not over, the full mark on the dipstick. Add 5W-30 synthetic oil when the oil level is low.

Check the oil level before each use. For extended operation, check the oil level every 8 hours. Do not check the oil level when the generator set is running. Shut down the generator set and wait several minutes before checking the oil.

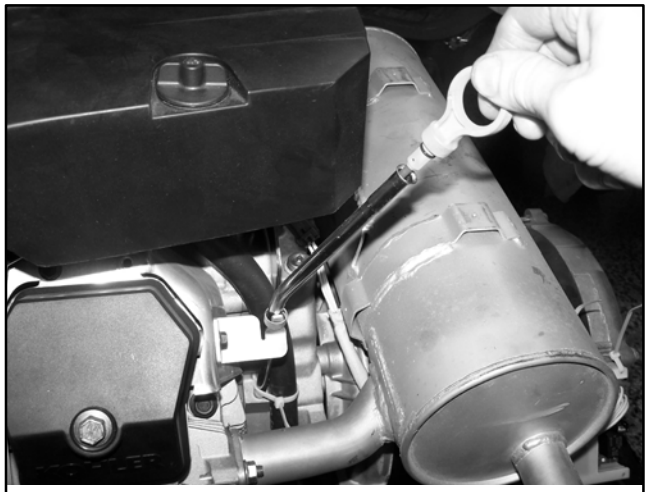

Figure 3-1 Oil Check (17/18 kW shown)

3.2.3 Engine Oil Recommendation

Use 5W-30 API (American Petroleum Institute) Service Class SG, SH, or SJ synthetic oil. Synthetic oil oxidizes and thickens less than other oils and leaves the engine intake valves and pistons cleaner.

3.2.4 Oil Change Procedure

Note: Dispose of all waste materials (engine oil, fuel, filter, etc.) in an environmentally safe manner.

Drain the oil while it is still warm.

1. **Drain the oil.**
   a. Place the generator set master switch in the OFF position.
   b. Disconnect the power to the battery charger.
   c. Disconnect the generator set engine starting battery, negative (–) lead first.
   d. Remove the housing side panel.
   e. Clean the area around the dipstick and oil fill cap.
   f. Remove the oil drain hose from its retaining clip. Remove the cap from the oil drain hose and lower the hose into an oil collection container.
   g. Open the oil drain valve on the engine.
   h. Remove the dipstick and oil fill cap. Allow time for the engine oil to drain completely.
   i. Close the oil drain valve. Replace the cap on the oil drain hose. Replace the oil drain hose in its retaining clip.
   j. Replace the dipstick.
2. **Replace the oil filter.**
   a. Clean the area around the oil filter. Remove the oil filter by rotating it counterclockwise with an oil filter wrench.
   b. Clean the gasket sealing surface of the oil filter adapter.
   c. Apply a light coat of clean oil to the rubber seal of the new oil filter.
   d. Install the new oil filter following the instructions provided with the filter.

3. **Fill with oil.**

   a. Fill the engine to the F mark on the dipstick. The engine oil capacity is shown in Figure 3-2. See Section 3.2.3, Engine Oil Recommendation, for oil selection.

Generator Set	Oil Capacity, L (qt.)
8.5/12RES	1.9 (2.0)
17/18RES	2.8 (3.0)

Figure 3-2 Engine Oil Capacity

   b. Reinstall the dipstick and the oil fill cap.

   c. Check that the generator set master switch is in the OFF position.

   d. Reconnect the generator set engine starting battery, negative (–) lead last.

   e. Reconnect the power to the battery charger.

   f. Start and run the generator set for a minute to allow the oil pressure to reach operating range.

   g. Stop the generator set, wait 1 minute, and then recheck the oil level. Add oil to bring the level up to the F mark on the dipstick.

4. **Check for leaks.**

   a. Check for oil leaks.

   b. Fix leaks and recheck the oil level.

   c. Reinstall the housing side panel.

3.2.5 Oil Cooler, 17/18 kW

Inspect and clean the oil cooler at the intervals indicated in the service schedule. The oil cooler must be kept free of debris.

See Figure 3-3 for the oil cooler location. The oil cooler is located under the No. 2 cylinder shroud. Remove the top mounting screw and loosen the two side screws, then lift off the cylinder shroud.

Clean the outside of the oil cooler fins with a brush or with compressed air.

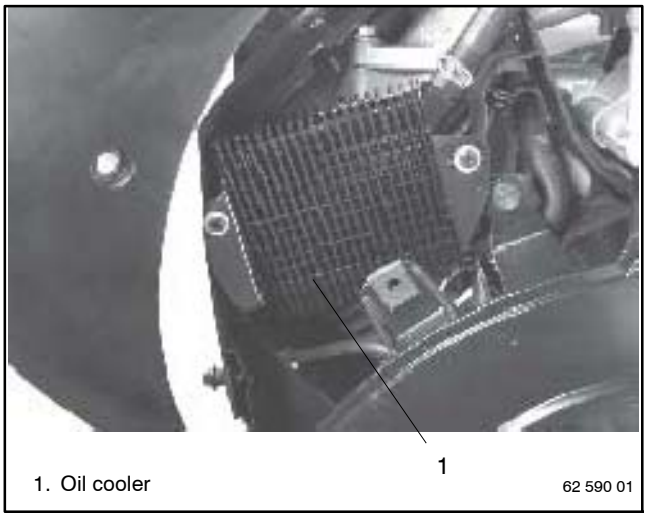

Figure 3-3 Oil Cooler Location

3.3 Spark Plugs

Reset the spark plug gap or replace the plugs with new plugs as necessary.

1. Clean the area around the base of the spark plug to keep dirt and debris out of the engine.

2. Remove the spark plug and check its condition. Replace the spark plug if it is worn or if its reuse is questionable.

3. Check the spark plug gap using a wire feeler gauge. See Figure 3-4 for the recommended spark plug gap. Adjust the gap by carefully bending the ground electrode. See Figure 3-5 and Figure 3-6.

4. Reinstall the spark plug into the cylinder head. Torque the spark plug to 24.4–29.8 Nm (18–22 ft. lb.)

Generator Set	Spark Plug Gap
8.5 kW	0.51 mm (0.020 in.)
12/17/18RES	0.76 mm (0.030 in.)

Figure 3-4 Spark Plug Gap

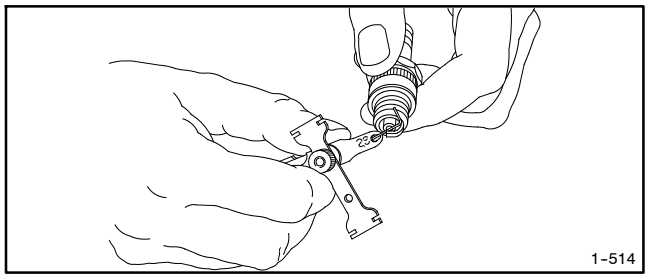

Figure 3-5 Checking the Spark Plug Gap

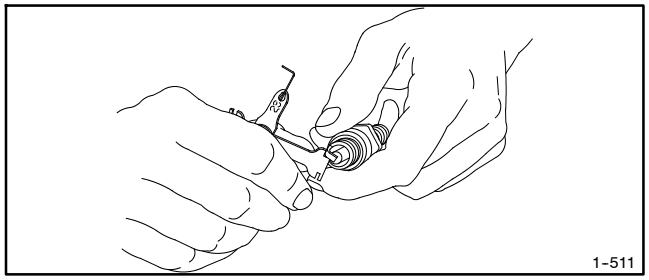

Figure 3-6 Adjusting the Spark Plug Gap

3.4 Air Cleaner Service

3.4.1 Air Cleaner, 8.5/12RES

The engine has a replaceable high-density paper air cleaner element with an oiled foam precleaner. See Figure 3-7.

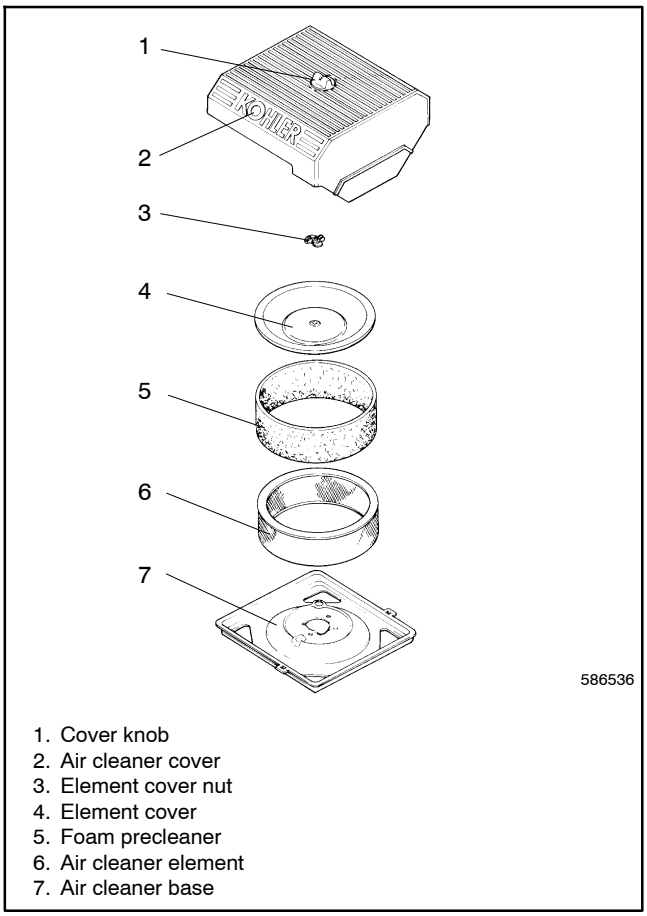

Figure 3-7 Air Cleaner Components

Check for a buildup of dirt and debris around the air cleaner system. Keep this area clean. Also check for loose or damaged components. Replace all bent or damaged air cleaner components.

Note: Operating the engine with loose or damaged air cleaner components could allow unfiltered air into the engine causing premature wear and failure.

Precleaner Service

Use the following procedure to wash and reoil the precleaner as indicated in the service schedule. Wash and reoil the precleaner more often under extremely dusty or dirty conditions.

1. Place the generator set master switch in the OFF/RESET position.

2. Disconnect the power to the battery charger.

3. Disconnect the battery, negative (–) lead first.

4. Loosen the cover retaining knob and remove the cover. Remove the precleaner from the paper element. Wash the precleaner in warm water with detergent. Rinse the precleaner thoroughly until all traces of detergent are eliminated. Squeeze out excess water (do not wring). Allow the precleaner to air dry.

5. Saturate the precleaner with new engine oil. Squeeze out all of the excess oil.

6. Reinstall the precleaner over the paper element.

7. Reinstall the air cleaner cover. Secure the cover with the cover retaining knob.

8. Reconnect the power to the battery charger.

9. Reconnect the generator set engine starting battery, negative (–) lead last.

Paper Element Service

Use the following procedure to replace the paper element at the intervals specified in the service schedule. Replace the paper element more often under extremely dusty or dirty conditions.

1. Place the generator set master switch in the OFF/ RESET position.

2. Disconnect the power to the battery charger.

3. Disconnect the generator set engine starting battery, negative (–) lead first.

4. Loosen the cover retaining knob and remove the cover.

5. Remove the element cover nut, element cover, and the paper element with precleaner.

6. Remove the precleaner from the paper element.

   Note: Do not wash the paper element or clean it with pressurized air, as this will damage the element.

7. Replace the element if it is dirty, bent, or damaged.

8. Check the air cleaner base. Make sure it is secure and not bent or damaged. Also check the element cover for damage and fit. Replace all damaged air cleaner components. Remove any loose dirt or debris from the air cleaner base. Wipe the base carefully so that no dirt drops into the intake throat. Check the condition of the rubber seal on the air cleaner stud and replace the seal if necessary.

9. Reinstall the paper element, precleaner, element cover, element cover nut, and the air cleaner cover. Secure the cover with the cover retaining knob.

10. Reconnect the power to the battery charger.

11. Reconnect the generator set engine starting battery, negative (–) lead last.

3.4.2 Air Cleaner, 17/18RES

The engine is equipped with a replaceable, high density paper air cleaner element. See Figure 3-8.

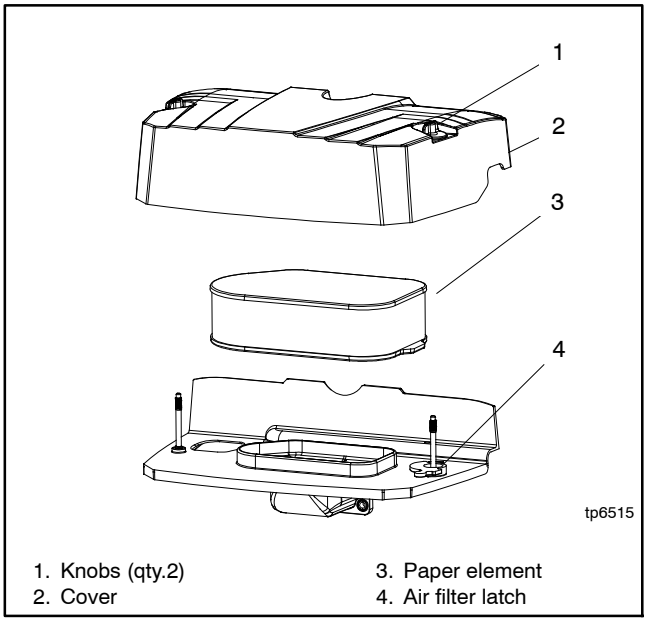

Figure 3-8 Air Cleaner Components

Check the air cleaner daily or before starting the engine. Check for a buildup of dirt and debris around the air cleaner system. Keep this area clean. Also check for loose or damaged components. Replace all bent or damaged air cleaner components.

Note: Operating the engine with loose or damaged air cleaner components could allow unfiltered air into the engine causing premature wear and failure.

Paper Element Service

Replace the paper element at the intervals indicated in the service schedule. See Section 3.1.2 for the service schedule. See Figure 3-8 for the air cleaner components.

1. Loosen the two cover retaining knobs and remove the cover.
2. Rotate the air filter latch counterclockwise to unlock, then remove the paper element.
3. Do not wash the paper element or use pressurized air, as this will damage the element. Replace a dirty, bent, or damaged element. Handle new elements carefully; do not use if the sealing surfaces are bent or damaged.
4. When servicing the air cleaner, check the air cleaner base and latch. Make sure it is secured and not bent or damaged. Also, check the element cover for damage or improper fit. Replace all damaged air cleaner components.

Note: If any loose dirt or debris fell on the air cleaner base when the element was removed, carefully remove it and wipe the base clean. Be careful that none of it drops into the intake throat.

5. Reinstall the paper element onto the air cleaner base. Make sure the element is flat and properly seated. Rotate the latch clockwise, over the molded lip on the element.
6. Install the air cleaner cover and secure with the two retaining knobs.
7. When element replacement is necessary, order genuine Kohler parts.

3.5 Cooling System

The engine fan draws cooling air through the openings in the sides and end near the battery. The alternator fan draws cooling air through openings on the side walls of the enclosure. The cooling air mixes with the engine exhaust and is discharged at the exhaust outlet. See Figure 3-9. To prevent generator set damage caused by overheating, keep the housing cooling inlets and outlets clean and unobstructed at all times.

Note: Do not block the generator set cooling air inlets or mount other equipment above them. Overheating and severe generator damage may occur.

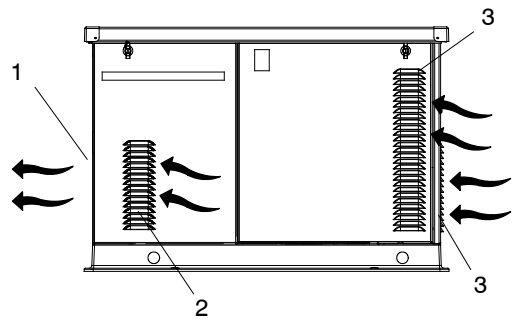

1. Exhaust outlet
2. Alternator air intake (both sides)
3. Engine air intake

Figure 3-9 Cooling Air Intake and Exhaust

3.6 Exhaust System

Remove all combustible materials from the exhaust location. Combustible materials include building materials as well as natural surroundings. Keep dry field grass, foliage, and combustible landscaping material a minimum of 1.5 m (5 ft.) from the exhaust outlet.

Periodically inspect the exhaust system components for cracks, leaks, and corrosion.

- Check for corroded or broken metal parts and replace them as needed.
- Check that the exhaust outlet is clear.

3.7 Battery

⚠ WARNING

Sulfuric acid in batteries.
Can cause severe injury or death.

Wear protective goggles and clothing. Battery acid may cause blindness and burn skin.

Battery electrolyte is a diluted sulfuric acid. Battery acid can cause severe injury or death. Battery acid can cause blindness and burn skin. Always wear splashproof safety goggles, rubber gloves, and boots when servicing the battery. Do not open a sealed battery or mutilate the battery case. If battery acid splashes in the eyes or on the skin, immediately flush the affected area for 15 minutes with large quantities of clean water. Seek immediate medical aid in the case of eye contact. Never add acid to a battery after placing the battery in service, as this may result in hazardous spattering of battery acid.

Battery acid cleanup. Battery acid can cause severe injury or death. Battery acid is electrically conductive and corrosive. Add 500 g (1 lb.) of bicarbonate of soda (baking soda) to a container with 4 L (1 gal.) of water and mix the neutralizing solution. Pour the neutralizing solution on the spilled battery acid and continue to add the neutralizing solution to the spilled battery acid until all evidence of a chemical reaction (foaming) has ceased. Flush the resulting liquid with water and dry the area.

Battery gases. Explosion can cause severe injury or death. Battery gases can cause an explosion. Do not smoke or permit flames or sparks to occur near a battery at any time, particularly when it is charging. Do not dispose of a battery in a fire. To prevent burns and sparks that could cause an explosion, avoid touching the battery terminals with tools or other metal objects. Remove all jewelry before servicing the equipment. Discharge static electricity from your body before touching batteries by first touching a grounded metal surface away from the battery. To avoid sparks, do not disturb the battery charger connections while the battery is charging. Always turn the battery charger off before disconnecting the battery connections. Ventilate the compartments containing batteries to prevent accumulation of explosive gases.

Battery short circuits. Explosion can cause severe injury or death. Short circuits can cause bodily injury and/or equipment damage. Disconnect the battery before generator set installation or maintenance. Remove all jewelry before servicing the equipment. Use tools with insulated handles. Remove the negative (–) lead first when disconnecting the battery. Reconnect the negative (–) lead last when reconnecting the battery. Never connect the negative (–) battery cable to the positive (+) connection terminal of the starter solenoid. Do not test the battery condition by shorting the terminals together.

Refer to this section for general battery information and maintenance. Also consult the battery manufacturer's instructions for battery maintenance.

All generator set models use a negative ground with a 12-volt engine electrical system. Consult the generator set nameplate for the engine electrical system voltage. Consult the generator spec sheet for battery capacity recommendations for replacement purposes. Wiring diagrams provide battery connection information. See Figure 3-10 for typical battery connections.

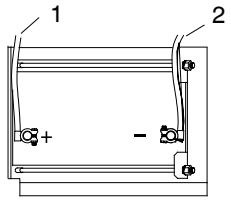

1. To positive (+) terminal on starter solenoid.
2. To ground (–) terminal on or near starter motor.

Figure 3-10 12-Volt Engine Electrical System Single Starter Motor, Typical Battery Connection

Clean the battery and cables and tighten battery terminals using the service schedule recommendations. To prevent corrosion, maintain tight, dry electrical connections at the battery terminals. To remove corrosion from battery terminals, disconnect the cables from the battery and scrub the terminals with a wire brush. Clean the battery and cables with a solution of baking soda and water. After cleaning, flush the battery and cables with clean water and wipe them with a dry, lint-free cloth.

After reconnecting the battery cables, coat the battery terminals with petroleum jelly, silicone grease, or other nonconductive grease.

3.8 Battery Charger

The generator set is equipped with a battery charger to maintain the engine starting battery. The charger's DC leads are factory-wired. Periodically check and tighten all connections.

See Section 2.7, Battery Charger.

3.9 Circuit Protection

If the generator set circuit breaker trips or the fuses blow repeatedly, see Section 4, Troubleshooting, for possible causes.

3.9.1 Line Circuit Breaker

A line circuit breaker interrupts the generator output in the event of a fault in the wiring between the generator and the load. The line circuit breaker location is shown in Figure 1-2. The circuit breaker rating is shown in Figure 3-11. If the circuit breaker trips, reduce the load and switch the breaker back to the ON position. With the breaker in the OFF position the generator set runs but the generator output is disconnected from the load.

Model	Circuit Breaker Rating, Amp
8.5RES	40
12RES	50
12TRES	20
17/18RES	80
18TRES	25

Figure 3-11 Line Circuit Breaker Rating

3.9.2 Fuses

Three panel-mounted fuses protect the alternator and electrical controls. See Section 1.5 for fuse locations. Another 10-amp fuse protects the battery charger.

See Figure 3-12 for fuse part numbers. Always identify and correct the cause of a blown fuse before restarting the generator set. Refer to Section 4, Troubleshooting, for conditions that may indicate a blown fuse. Replace blown fuses with identical replacement parts.

Fuse	Rating, Amp	Label	Part Number
Auxiliary winding	20	F1	292937
Relay interface board	10	F2	223316
Controller	10	F3	223316
Battery charger (RES)	10	—	223316

Figure 3-12 Fuses

3.10 Storage Procedure

Perform the following storage procedure before removing the generator set from service for three months or longer. Follow the engine manufacturer's recommendations for storage, if available.

Note: Run the generator set monthly whenever possible.

3.10.1 Lubricating System

1. Operate the generator set until it reaches operating temperature, or about 15 minutes.
2. Stop the generator set.
3. While the engine is still warm, drain the engine lubrication oil from the engine crankcase.
4. Refill engine crankcase with oil. See Section 3.2.3 for oil recommendations.
5. Run the generator set for a few minutes to distribute the clean oil.
6. Stop the generator set.

3.10.2 Fuel System

1. Start the generator set.
2. With the generator set running, shut off the gas supply.
3. Run the generator set until the engine stops.
4. Place the generator set master switch in the OFF/ RESET position.

3.10.3 Cylinder Lubrication

1. Remove the spark plugs.
2. Pour one tablespoon of engine oil into each spark plug hole. Install the spark plugs and *ground* the spark plug leads. *Do not connect the leads to the plugs.*
3. Toggle the generator set master switch to crank the engine two or three revolutions to lubricate the cylinders.

3.10.4 Exterior Preparation

1. Clean the exterior surface of the generator set.
2. Seal all openings in the engine with nonabsorbent adhesive tape.
3. Mask all areas to be used for electrical contact.
4. Spread a light film of oil over unpainted metallic surfaces to prevent rust and corrosion.

3.10.5 Battery

Perform battery storage last.

1. Place the generator set master switch in the OFF/ RESET position.
2. Disconnect the battery, negative (–) lead first.
3. Clean the battery.
4. Place the battery in a warm, dry location.
5. Connect the battery to a float/equalize battery charger, or charge the battery monthly using a trickle charger. Follow the battery charger manufacturer's recommendations.

Notes

4.1 Introduction

Use the following charts to diagnose and correct common problems. First check for simple causes such as a dead engine starting battery, loose connections, or an open circuit breaker. The charts include a list of common problems, possible causes of the problem, and recommended corrective actions.

If the procedures in this manual do not explain how to correct the problem, contact an authorized distributor/dealer. Maintain a record of repairs and adjustments performed on the equipment. Use the record to help describe the problem and repairs or adjustments made to the equipment.

4.2 Controller Troubleshooting

Figure 4-1 contains troubleshooting, diagnostic, and repair information for the ADC-RES controller.

4.3 Generator Set Troubleshooting

Figure 4-2 contains generator set troubleshooting, diagnostic, and repair information. Check for loose connections before replacing parts.

Fault Codes

The Advanced Digital Control displays fault codes to aid in troubleshooting. Fault codes, descriptions, and recommended actions are listed in Section 2.6.

If a fault code is displayed, identify and correct the cause of the fault condition. Then reset the controller. See Section 2.6.3.

Problem	Possible Cause	Corrective Action
Controller LED display is off	No power to the controller:	
	Controller fuse (F3) is blown.	Replace the fuse. If the fuse blows again, contact an authorized distributor/dealer.
	Low or no battery voltage.	Check connections. Check the engine starting battery and battery charger. See Figure 4-3.
	Generator set master switch is in the OFF/RESET position.	Move generator set master switch to the AUTO or RUN position. In AUTO, the display will not turn on until the first start command is received.
	The controller is in sleep mode. See Section 2.4.2.	Controller display will activate when a remote start command is received or the generator set master switch is moved to the RUN position. Use the remote switch to start generator set and activate the controller display, if desired. See Section 2.4. Controllers with application code version 1.13 or higher can be configured to enable or disable the sleep mode. See the generator set Installation Manual for instructions.

Figure 4-1 ADC-RES Troubleshooting Chart

Problem	Possible Cause	Corrective Action
The generator set does not crank.	Fault shutdown	Check for a fault code on the controller display. See Section 2.6.
	Battery weak or dead	Check power to the battery charger. Recharge or replace the battery.
	Battery charger fuse blown	Replace the fuse. Contact an authorized distributor/ dealer for service if fuse blows repeatedly.
	Battery connections reversed or poor	Check the connections.
	Fuse F2 blown	Replace the fuse. Contact an authorized distributor/ dealer for service if fuse blows repeatedly.
	Fuse F3 blown	Replace the fuse. Contact an authorized distributor/ dealer for service if fuse blows repeatedly.
	Generator set master switch in the OFF position	Move the master switch to AUTO for remote start or to RUN for local start.
The generator set cranks but does not start, starts hard, lacks power, or operates erratically.	Air cleaner clogged	Clean and/or replace the air cleaner.
	Battery weak or dead	Check power to the battery charger. Recharge or replace the battery.
	Battery connection poor	Clean and tighten the battery connections.
	Spark plug wire connection loose	Check the spark plug wires.
	Low oil pressure shutdown	Check the oil level.
	Fuel pressure insufficient	Check the fuel supply and valves.
	Engine malfunction	Contact an authorized distributor/dealer.
No AC output.	AC circuit breaker in the OFF position	Place the circuit breaker in the ON position.
	AC circuit breaker tripping because of overload	Reduce the load on the generator set.
	AC circuit breaker tripping because of short circuit	Contact an authorized distributor/dealer for service.
	Auxiliary winding fuse (F1) blown	Replace the fuse. Contact an authorized distributor/ dealer for service if fuse blows repeatedly.
Low output or excessive drop in voltage.	Generator set overloaded	Reduce the load.
Generator set stops suddenly.	Low oil pressure shutdown	Check the oil level. Check for signs of oil leaks.
	Out of fuel	Check fuel supply.
	Overcrank shutdown	Reset the controller. If the overcrank fault occurs again, contact an authorized distributor/dealer.
	Controller fuse (F3) blown	Replace the fuse. If the fuse blows again, contact an authorized distributor/dealer.
	Overspeed shutdown	Reset the controller. If the overspeed fault occurs again, contact an authorized distributor/dealer.
	Generator set master switch in the OFF/RESET position	Move the switch to the correct position (RUN or AUTO).
	Remote stop command received from a remote switch or ATS	Check the remote switch position.
	Engine malfunction	Contact an authorized distributor/dealer.
	Auxiliary winding fuse (F1) blown	Replace the fuse. Contact an authorized distributor/dealer for service if fuse blows repeatedly.

Figure 4-2 General Troubleshooting Chart

4.4 Battery Charger Troubleshooting

Use the battery charger's LED indicators and the table in Figure 4-3 or Figure 4-4 to troubleshoot battery charger operation problems.

Problem	Cause	Solution
Red LED stays on for more than 24 hours	One or more inoperative or damaged cells.	Load test the battery and replace, if necessary
	Battery charger has reduced its output voltage below the normal level due to a DC overload or a DC short.	Remove the source of the overload or short. Disconnect the battery charger's black (NEGATIVE) ring terminal from the battery. Reapply AC power and the green LED only should now light.
	Onboard DC systems are drawing more current than the battery charger can replace.	Turn off all DC equipment while charging.
Red and green LEDs stay on for more than 24 hours	Onboard DC systems are drawing between 1.5 and 5 amps.	Turn off all DC equipment while charging.
	One or more inoperative or damaged cells.	Load test the battery and replace, if necessary
	Extremely low AC voltage at the battery charger.	Apply a higher AC voltage source or reduce the length of the extension cord.
Green LED stays on when the battery is known to be low	Open DC output fuse.	Replace AGS-10 fuse.
	Faulty or contaminated terminal connections.	Clean and tighten or repair all terminal connections.
	One or more inoperative or damaged cells.	Load test the battery and replace, if necessary.
Neither of the LEDs turn on when the AC power is applied	No AC power available at the battery charger.	Connect AC power or reset the AC breaker on the main panel.
	Component failure.	Replace battery charger.

Figure 4-3 6-Amp Battery Charger Troubleshooting (for single-phase models)

Problem	Cause	Solution
Green LED is off and there is no output voltage.	No power to the battery charger.	Check the power supply to the charger. Check the upstream circuit breakers and fuses. Check fuse FS (1A-T) inside the battery charger.
Abnormal low voltage, charger is operating.	The battery completely discharged and the charger is operating at the current limit.	Disconnect the battery and verify that the charger output is 13.2 VDC. Reconnect the charger and allow time for the battery to recharge. The battery voltage should rise gradually. Test the battery.
The battery is discharged, but the charger has power and is operating.	Blown fuse.	Check the 5-amp fuse F2 (5A-T) *inside* the battery charger and replace if necessary. Check inline fuse F4 and replace if necessary.

Figure 4-4 2.5-Amp Battery Charger Troubleshooting (for three-phase models)

Notes

Appendix A Abbreviations

The following list contains abbreviations that may appear in this publication.

A, amp	ampere
ABDC	after bottom dead center
AC	alternating current
A/D	analog to digital
ADC	advanced digital control; analog to digital converter
adj.	adjust, adjustment
ADV	advertising dimensional drawing
Ah	amp-hour
AHWT	anticipatory high water temperature
AISI	American Iron and Steel Institute
ALOP	anticipatory low oil pressure
alt.	alternator
Al	aluminum
ANSI	American National Standards Institute (formerly American Standards Association, ASA)
AO	anticipatory only
APDC	Air Pollution Control District
API	American Petroleum Institute
approx.	approximate, approximately
APU	Auxiliary Power Unit
AQMD	Air Quality Management District
AR	as required, as requested
AS	as supplied, as stated, as suggested
ASE	American Society of Engineers
ASME	American Society of Mechanical Engineers
assy.	assembly
ASTM	American Society for Testing Materials
ATDC	after top dead center
ATS	automatic transfer switch
auto.	automatic
aux.	auxiliary
avg.	average
AVR	automatic voltage regulator
AWG	American Wire Gauge
AWM	appliance wiring material
bat.	battery
BBDC	before bottom dead center
BC	battery charger, battery charging
BCA	battery charging alternator
BCI	Battery Council International
BDC	before dead center
BHP	brake horsepower
blk.	black (paint color), block (engine)
blk. htr.	block heater
BMEP	brake mean effective pressure
bps	bits per second
br.	brass
BTDC	before top dead center
Btu	British thermal unit
Btu/min.	British thermal units per minute
C	Celsius, centigrade
cal.	calorie
CAN	controller area network
CARB	California Air Resources Board
CAT5	Category 5 (network cable)
CB	circuit breaker
CC	crank cycle
cc	cubic centimeter
CCA	cold cranking amps
ccw.	counterclockwise
CEC	Canadian Electrical Code
cert.	certificate, certification, certified
cfh	cubic feet per hour
cfm	cubic feet per minute
CG	center of gravity
CID	cubic inch displacement
CL	centerline
cm	centimeter
CMOS	complementary metal oxide substrate (semiconductor)
com	communications (port)
coml	commercial
Coml/Rec	Commercial/Recreational
conn.	connection
cont.	continued
CPVC	chlorinated polyvinyl chloride
crit.	critical
CSA	Canadian Standards Association
CT	current transformer
Cu	copper
cUL	Canadian Underwriter's Laboratories
CUL	Canadian Underwriter's Laboratories
cu. in.	cubic inch
cw.	clockwise
CWC	city water-cooled
cyl.	cylinder
D/A	digital to analog
DAC	digital to analog converter
dB	decibel
dB(A)	decibel (A weighted)
DC	direct current
DCR	direct current resistance
deg., °	degree
dept.	department
dia.	diameter
DI/EO	dual inlet/end outlet
DIN	Deutsches Institut fur Normung e. V. (also Deutsche Industrie Normenausschuss)
DIP	dual inline package
DPDT	double-pole, double-throw
DPST	double-pole, single-throw
DS	disconnect switch
DVR	digital voltage regulator
E^2PROM, EEPROM	electrically-erasable programmable read-only memory
E, emer.	emergency (power source)
ECM	electronic control module, engine control module
EDI	electronic data interchange
EFR	emergency frequency relay
e.g.	for example *(exempli gratia)*
EG	electronic governor
EGSA	Electrical Generating Systems Association
EIA	Electronic Industries Association
EI/EO	end inlet/end outlet
EMI	electromagnetic interference
emiss.	emission
eng.	engine
EPA	Environmental Protection Agency
EPS	emergency power system
ER	emergency relay
ES	engineering special, engineered special
ESD	electrostatic discharge
est.	estimated
E-Stop	emergency stop
etc.	et cetera (and so forth)
exh.	exhaust
ext.	external
F	Fahrenheit, female
FHM	flat head machine (screw)
fl. oz.	fluid ounce
flex.	flexible
freq.	frequency
FS	full scale
ft.	foot, feet
ft. lb.	foot pounds (torque)
ft./min.	feet per minute
ftp	file transfer protocol
g	gram
ga.	gauge (meters, wire size)
gal.	gallon
gen.	generator
genset	generator set
GFI	ground fault interrupter
GND, ⏚	ground
gov.	governor
gph	gallons per hour
gpm	gallons per minute
gr.	grade, gross
GRD	equipment ground
gr. wt.	gross weight
H x W x D	height by width by depth
HC	hex cap
HCHT	high cylinder head temperature
HD	heavy duty
HET	high exhaust temp., high engine temp.
hex	hexagon
Hg	mercury (element)
HH	hex head
HHC	hex head cap
HP	horsepower
hr.	hour
HS	heat shrink
hsg.	housing
HVAC	heating, ventilation, and air conditioning
HWT	high water temperature
Hz	hertz (cycles per second)
IBC	International Building Code
IC	integrated circuit
ID	inside diameter, identification
IEC	International Electrotechnical Commission
IEEE	Institute of Electrical and Electronics Engineers
IMS	improved motor starting
in.	inch
in. H_2O	inches of water
in. Hg	inches of mercury
in. lb.	inch pounds
Inc.	incorporated
ind.	industrial
int.	internal
int./ext.	internal/external
I/O	input/output
IP	internet protocol
ISO	International Organization for Standardization
J	joule
JIS	Japanese Industry Standard
k	kilo (1000)
K	kelvin
kA	kiloampere
KB	kilobyte (2^{10} bytes)
KBus	Kohler communication protocol
kg	kilogram

kg/cm^2	kilograms per square centimeter
kgm	kilogram-meter
kg/m^3	kilograms per cubic meter
kHz	kilohertz
kJ	kilojoule
km	kilometer
kOhm, kΩ	kilo-ohm
kPa	kilopascal
kph	kilometers per hour
kV	kilovolt
kVA	kilovolt ampere
kVAR	kilovolt ampere reactive
kW	kilowatt
kWh	kilowatt-hour
kWm	kilowatt mechanical
kWth	kilowatt-thermal
L	liter
LAN	local area network
L x W x H	length by width by height
lb.	pound, pounds
lbm/ft^3	pounds mass per cubic feet
LCB	line circuit breaker
LCD	liquid crystal display
LED	light emitting diode
Lph	liters per hour
Lpm	liters per minute
LOP	low oil pressure
LP	liquefied petroleum
LPG	liquefied petroleum gas
LS	left side
L_{wa}	sound power level, A weighted
LWL	low water level
LWT	low water temperature
m	meter, milli (1/1000)
M	mega (10^6 when used with SI units), male
m^3	cubic meter
m^3/hr.	cubic meters per hour
m^3/min.	cubic meters per minute
mA	milliampere
man.	manual
max.	maximum
MB	megabyte (2^{20} bytes)
MCCB	molded-case circuit breaker
MCM	one thousand circular mils
meggar	megohmmeter
MHz	megahertz
mi.	mile
mil	one one-thousandth of an inch
min.	minimum, minute
misc.	miscellaneous
MJ	megajoule
mJ	millijoule
mm	millimeter
mOhm, mΩ	milliohm
MOhm, MΩ	megohm
MOV	metal oxide varistor
MPa	megapascal
mpg	miles per gallon
mph	miles per hour
MS	military standard
ms	millisecond
m/sec.	meters per second
mtg.	mounting
MTU	Motoren-und Turbinen-Union
MW	megawatt
mW	milliwatt
μF	microfarad
N, norm.	normal (power source)
NA	not available, not applicable
nat. gas	natural gas
NBS	National Bureau of Standards
NC	normally closed
NEC	National Electrical Code
NEMA	National Electrical Manufacturers Association
NFPA	National Fire Protection Association
Nm	newton meter
NO	normally open
no., nos.	number, numbers
NPS	National Pipe, Straight
NPSC	National Pipe, Straight-coupling
NPT	National Standard taper pipe thread per general use
NPTF	National Pipe, Taper-Fine
NR	not required, normal relay
ns	nanosecond
OC	overcrank
OD	outside diameter
OEM	original equipment manufacturer
OF	overfrequency
opt.	option, optional
OS	oversize, overspeed
OSHA	Occupational Safety and Health Administration
OV	overvoltage
oz.	ounce
p., pp.	page, pages
PC	personal computer
PCB	printed circuit board
pF	picofarad
PF	power factor
ph., ∅	phase
PHC	Phillips® head Crimptite® (screw)
PHH	Phillips® hex head (screw)
PHM	pan head machine (screw)
PLC	programmable logic control
PMG	permanent magnet generator
pot	potentiometer, potential
ppm	parts per million
PROM	programmable read-only memory
psi	pounds per square inch
psig	pounds per square inch gauge
pt.	pint
PTC	positive temperature coefficient
PTO	power takeoff
PVC	polyvinyl chloride
qt.	quart, quarts
qty.	quantity
R	replacement (emergency) power source
rad.	radiator, radius
RAM	random access memory
RDO	relay driver output
ref.	reference
rem.	remote
Res/Coml	Residential/Commercial
RFI	radio frequency interference
RH	round head
RHM	round head machine (screw)
rly.	relay
rms	root mean square
rnd.	round
RO	read only
ROM	read only memory
rot.	rotate, rotating
rpm	revolutions per minute
RS	right side
RTDs	Resistance Temperature Detectors
RTU	remote terminal unit
RTV	room temperature vulcanization
RW	read/write
SAE	Society of Automotive Engineers
scfm	standard cubic feet per minute
SCR	silicon controlled rectifier
s, sec.	second
SI	*Systeme international d'unites,* International System of Units
SI/EO	side in/end out
sil.	silencer
SMTP	simple mail transfer protocol
SN	serial number
SNMP	simple network management protocol
SPDT	single-pole, double-throw
SPST	single-pole, single-throw
spec	specification
specs	specification(s)
sq.	square
sq. cm	square centimeter
sq. in.	square inch
SMS	short message service
SS	stainless steel
std.	standard
stl.	steel
tach.	tachometer
TB	terminal block
TCP	transmission control protocol
TD	time delay
TDC	top dead center
TDEC	time delay engine cooldown
TDEN	time delay emergency to normal
TDES	time delay engine start
TDNE	time delay normal to emergency
TDOE	time delay off to emergency
TDON	time delay off to normal
temp.	temperature
term.	terminal
THD	total harmonic distortion
TIF	telephone influence factor
tol.	tolerance
turbo.	turbocharger
typ.	typical (same in multiple locations)
UF	underfrequency
UHF	ultrahigh frequency
UIF	user interface
UL	Underwriter's Laboratories, Inc.
UNC	unified coarse thread (was NC)
UNF	unified fine thread (was NF)
univ.	universal
URL	uniform resource locator (web address)
US	undersize, underspeed
UV	ultraviolet, undervoltage
V	volt
VAC	volts alternating current
VAR	voltampere reactive
VDC	volts direct current
VFD	vacuum fluorescent display
VGA	video graphics adapter
VHF	very high frequency
W	watt
WCR	withstand and closing rating
w/	with
WO	write only
w/o	without
wt.	weight
xfmr	transformer

Notes

Notes

KOHLER®
POWER SYSTEMS

KOHLER CO. Kohler, Wisconsin 53044
Phone 920-457-4441, Fax 920-459-1646
For the nearest sales/service outlet in the
US and Canada, phone 1-800-544-2444
KohlerPower.com

Kohler Power Systems
Asia Pacific Headquarters
7 Jurong Pier Road
Singapore 619159
Phone (65) 6264-6422, Fax (65) 6264-6455

TP-6515 1/11f

© 2007, 2008, 2009, 2011, 2016 by Kohler Co. All rights reserved.